HIWIN®
Motion Control and System Technology

AC Servo Motor & D2 Drive

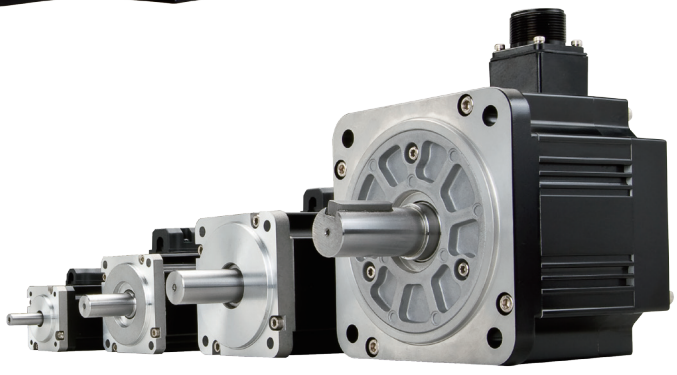

Technical Information

HIWIN®
Motion Control and System Technology

INDUSTRIE 4.0 Best Partner

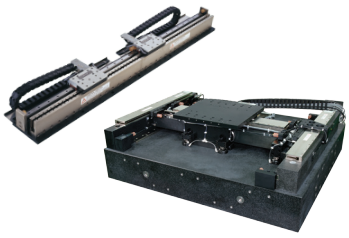

Linear Motor Stage

Automated transport / AOI application / Precision / Semiconductor

- Iron-core Linear Motor
- Coreless Linear Motor
- Linear Shaft Motor LMT
- Planar Servo Motor
- Air Bearing Platform
- X-Y Stage
- Gantry Systems

Linear Motor

Machine tool / Touch panel industry / Semiconductor industry / Laser manufacturing machine / Glass cutting machine

- Ironcore linear motor-LMFA series, LMSA series, LMSC series
- Ironless linear motor-LMC series, LMT series

Torque Motor (Direct Drive Motor)

Inspection / Testing equipment / Machine tools / Robot

- Rotary Tables-TMS,TMY,TMN
- TMRW Series
- TMRI Series

AC Servo Motor & Drive

Semiconductor / Packaging machine / SMT / Food industry / LCD

- Drives-D1, D1-N, D2
- Motors-50W~2000W

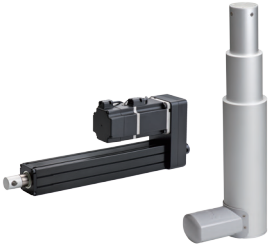

Linear Actuator

Hospital bed / Automatic window / Home care facility / Riveting / Press-fitting / Surface checks / Bending

- Servo Actuator-LAA series
- LAM series
- LAI series
- LAS series
- LAN series
- LAC series

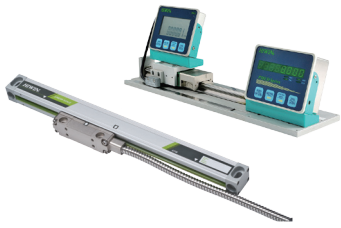

Positioning Measurement System

Cutting machines / Traditional gantry milling machines / Programmable drilling machines

- High Resolution
- Signal Translator
- High-precision Enclosed
- High Efficiency Counter

Multi Axis Robot

Pick-and-place / Assembly / Array and packaging / Semiconductor / Electro-Optical industry / Automotive industry / Food industry

- Articulated Robot
- Delta Robot
- SCARA Robot
- Wafer Robot
- Electric Gripper
- Integrated Electric Gripper
- Rotary Joint

Single Axis Robot

Precision / Semiconductor / Medical / FPD

- KK, SK
- KS, KA
- KU, KE, KC

Medical Equipment

Hospital / Rehabilitation centers / Nursing homes

- Robotic Gait Training System
- Hygiene System
- Robotic Endoscope Holder

Ballscrew

Precision Ground / Rolled

- Super S series
- Super T series
- Mini Roller
- Ecological & Economical lubrication Module E2
- Rotating Nut (R1)
- Energy-Saving & Thermal-Controlling (C1)
- Heavy Load Series (RD)
- Ball Spline

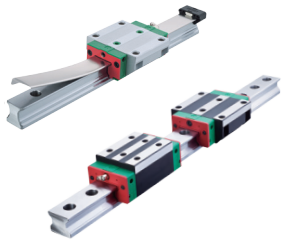

Linear Guideway

Automation / Semiconductor / Medical

- Ball Type--HG, EG, WE, MG, CG
- Quiet Type--QH, QE, QW, QR
- Other--RG, E2, PG, SE, RC

AC Servo Motor & Drive / D2 series

With High-tech control technology,
HIWIN AC Servo motors achieve a great cost-performance ratio for a complete motor drive solution.

Contents

1. Features

Excellent performance

Excellently high speed response

With the help of a semiconductor high-end motion control algorithm and advanced common gain concept, a high speed response is achieved, satisfying all motion control needs.

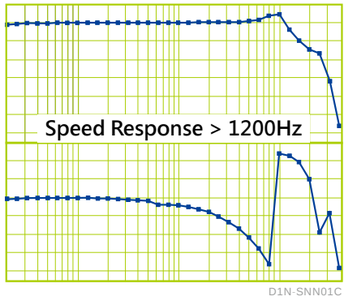

High acceleration responses

Using advanced controller design tools, and space vector current control technology, high level servo performance is achieved.

AC servo motor speed can change from -3000 to +3000 rpms in as little as 0.006 seconds.

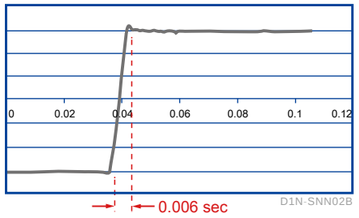

Built-in accuracy improvement feature

The D2 drive includes features to improve total positioning accuracy of the mechanical system.

The table size can be up to 5000 points. It is implemented in all control modes to optimize system behavior.

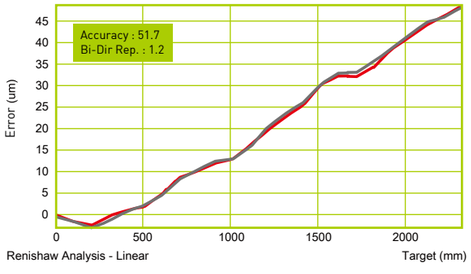

Without accuracy improvement feature

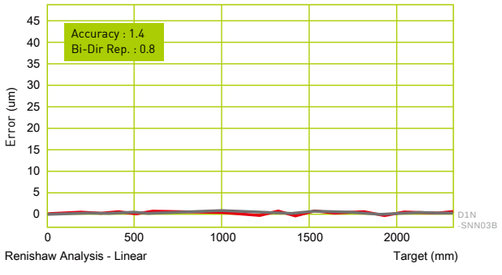

With accuracy improvement feature

Vibration Suppression Feature

The D2 drive can remove vibration frequency that occurs during movement.

It reduces vibrations caused by system's structure and improves the machine's production efficiency.

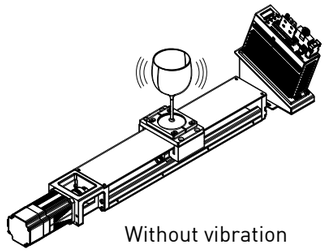

Without vibration suppression feature

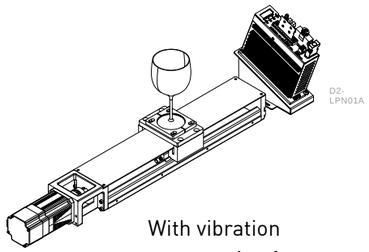

With vibration suppression feature

Electronic gear ratio and Encoder Emulator

The drive can help users adjust pulse resolution for the host controller, and to work with a variety of position encoders with different resolutions; it can also adjust analog position encoder output resolution to the host controller and meet the pulse receiving capability of different host controllers.

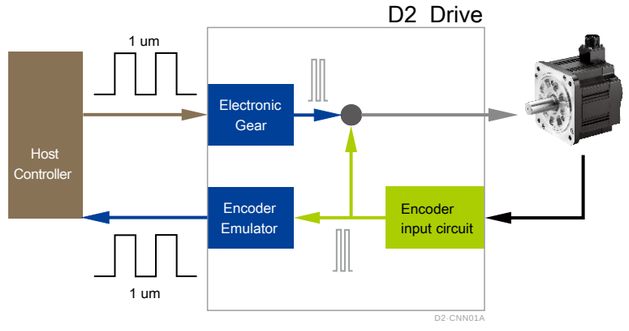

Simple Operation

Three Steps

Simple setup

Auto phase center

Selection

Initialization

Adjustment

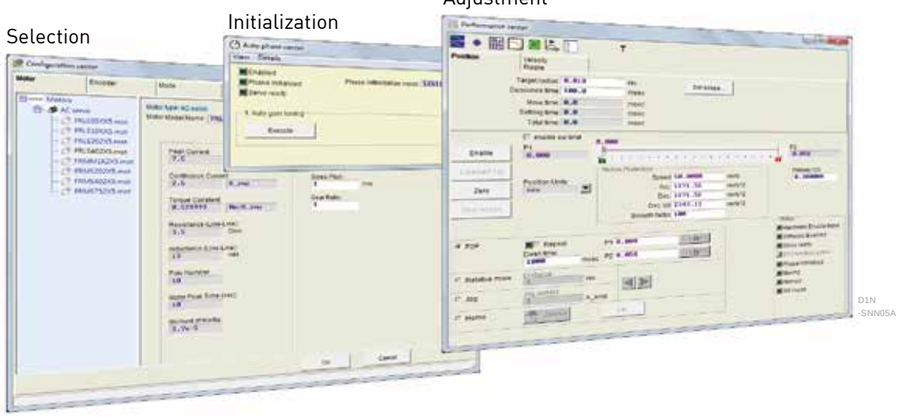

D1N -SNN05A

Easy Operation

Parameters are categorized according to features. Only necessary parameters are shown. No confusing parameter list.

LCD Display

No need to connect to a PC to complete all of the settings and operations.

LCD display provides instant status monitoring and displays error messages. Gain and test running can be quickly set by panel keys.

D2-SNN01A

Complete tool sets

Real-time scope, accuracy enhancement function, frequency analysis tools , gain scheduling tool, analysis tool, I/O setting functions, encoder output ratio adjustment function, Z phase signal width adjustment function, PDL , ZeroTune function and filter.

Accuracy enhancement function

To improve on the positioning accuracy of motion systems, the drive amplifier is featured with an error compensation function. By taking the measurements from a laser interferometer, the positioning error table can be built inside the drive, so that high positioning accuracy is achieved.

D1N-SNN08A

Frequency analysis tools

A powerful and easy to use tool for frequency analysis is provided. You can use the frequency analysis tools to display the real response in the form of a graph. You can easily set the best gain value for the system based on the real response, even first time users can easily get started.

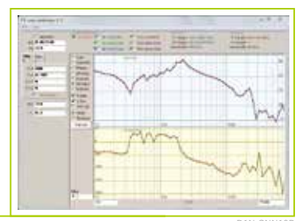

D1N-SNN10B

Advanced gain scheduling feature

After setting gains through frequency analysis tools, there is only one value to adjust: the common gain. The drive provides a gain scheduling function. You can adjust the gain according to different phases of motion, such as moving phase, settling phase, and in-position phase.

D1N-SNN09B

Variety of I / O functions

To support a number of different functions, you are free to configure the I/O pin functionality and adapt different hardware interface needs. This satisfies diverse requirements for different motion controllers with regards to their pin assignments and hardware interfaces.

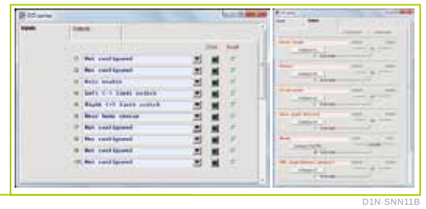

D1N-SNN11B

Analysis Tools

To solve a resonance problem, the drive offers a filter design tool for improving the control performance, a Fast Fourier Transform (FFT) and other mathematical operation tools. You can use the functions to calculate the resonant frequency of the system easily, and to make the filter design more accurate.

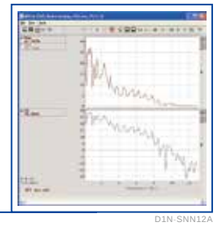

D1N-SNN12A

PDL (Process Description Language)

Easy-use process description language is provided.

Complex motions can be designated via PDL, such as extrusion process, point-to-point motion, fixed speed control, homing process and so on. PDL gains the advantages of flexibility and programmability. For quick learning, a number of sample programs are provided in the PDL manual.

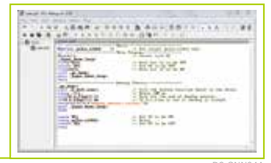

D2-SNN04A

ZeroTune function

Servo loop gains can be easily set without complex procedures via ZeroTune.

Only by selecting the load level of the motor, will stable velocity response be achieved. Even a beginner who has no knowledge of servo control can easily drive a motor.

D2-SNN05A

Filter

Drive supports two sets of bi-quad filters.

According to filter parameters, the bi-quad filters can be transformed into different filter types, such as low-pass filter, notch filter, ..., etc. Through well-defined filters, stage vibration can be easily suppressed, and control accuracy can be significantly increased.

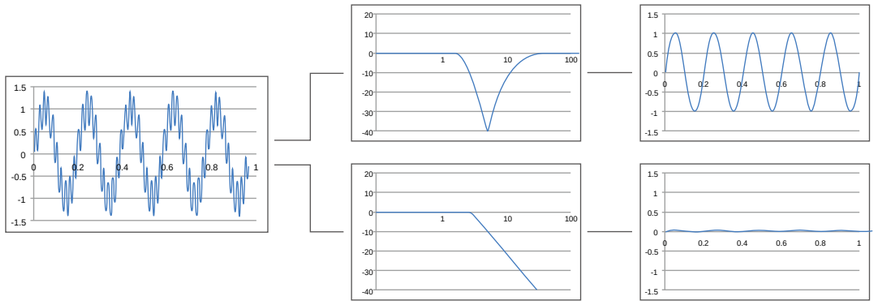

Easy integration

A complete solution with positioning module, motor and drive

In addition to providing motor and drive, a variety of linear positioning modules are provided. We provide customers with integrated services and a total solution.

High-speed network communications interface

The D2 is equipped with Industrial Ethernet communications (EtherCAT) interface, and also supports CoE (CANopen over EtherCAT) servo drive protocol. For of multi-axis control, it provides simple wiring, low cost, noise immunity, remote and distributed control needs.

Simple and robust commnunication interface

Equipped with Modbus communication, D-series drives support Modbus over serial lines (Modbus RTU and Modbus ASCII). On the application of automation, the motor position and velocity can be easily shown on the HMI via Modbus.

2. Safety Certification

2.1 RoHS compliant

Components and finished product all meet RoHS(Restriction of Hazardous Substances Regulation) requirements which ensure the compliance to relevant laws of quality of goods.

RoHS regulations limit six hazardous substances are: Lead (Pb), mercury (Hg), hexavalent chromium (Cr6 +), Polybrominated Biphenyls (PBB), the maximum allowable content of Polybrominated diphenyl ethers (PBDE) is 0.1% (1000ppm), Cadmium (Cd) is 0.01% (100ppm).

2.2 Comply with CE & UL regulations

		Drive	Motor
CE Directives	EMC Directives	EMC: EN61800-3 EN55011 EN61000-6-2 EN61000-6-4 EN61000-2-4 IEC60146-1-1 IEC61000-2-1	EN55011 EN61000-6-2 EN61000-6-4
	Low-Voltage Directives	LVDS:EN61800-5-1	EN60034-1 EN60034-5
UL Directives		UL:E348161 (D2T 100W/400W/1000W)	UL1004-1 UL1004-6

3. Model Descriptions

3.1 Servo drive

Code	1	2	2a	3	4	5	6	7	8	9	10	11	12
Example	D	2	T	-	0	4	2	3	-	S	-	B	0

Product

HIWIN servo drive D2 ..... = D2

Type

17bit encoder only..... = T
13bit encoder only..... = Blank

Rated output

100W.....= 01
400W.....= 04
1000W.....= 10
2000W.....= 20

Voltage range

1/3 phase 110/220VAC (For A,B,C frame) .....= 23
3 phase 220VAC (Only for D frame) .....= 32

Interface

Standard.....= S
EtherCAT(CoE) .....= E
EtherCAT(mega-ulink) .....= F
Standard with extension I/O modules .....= K
Modbus.....= T

Frame size

A frame(suggestion: 100W rated output) ..... = A
B frame(suggestion: 400W rated output)..... = B
C frame(suggestion: 1000W rated output) ..... = C
D frame(suggestion: 2000W rated output)..... = D

Encoder type

13bit less-wire incremental encoder..... = 0
17bit serial incermental encoder(HIWIN17) ..... = 4
Dual Loop (Full closed loop) and 17bit serial absolute encoder..... = 5

Model \ Interface	Standard	EtherCAT(CoE)	EtherCAT(mega-ulink)	Standard with extension I/O modules	Modbus
D2(frame A-C)	O	O	O	X	O
D2T(frame A-C)	O	O	O	△	X
D2T(frame D)	O	O	O	△	△

O: Available X:Unavailable △:Please contact with Sales Representative.

Note Single and three phase AC voltage drive only support rated output which is lower or equal to 1000W.

3.2 Servo motor

Code	1	2	3	4	5	6	7	8	9	10	11	12
Example	F	R	L	S	4	0	2	0	6	0	6	A

Product

HIWIN AC servo motor series ..... = FR

Type

Low inertia, small capacity(50W~400W) .....= LS
Medium inertia, small capacity(50W/100W/
400W/750W) .....= MS
Medium inertia, medium capacity(1000W/2000W)= MM

Output Power

50W..... = 05
100W..... = 10
200W..... = 20
400W(Low inertia) ..... = 40
400W(Medium inertia)..... = 4B
750W..... = 75
1000W..... = 1K
2000W..... = 2K

Drive input voltage

220V..... = 2

Holding brake options

Without holding brake.....= 0
With holding brake .....= B

Encoder type

13bit incremental encoder[1]..... = 5
17bit absolute encoder..... = 4
HIWIN 17 incremental encoder ..... = 6

Frame size

40mm(MS 50W/100W).....= 04
42mm(LS 50W/100W).....= A4
60 mm(200W/400W) .....= 06
80 mm(750W) .....= 08
130 mm(1000W/2000W) .....= 13

Motor shaft

Round shaft / without oil seal ..... = A
Round shaft / with oil seal[2] ..... = B
With key and center tap / without oil seal..... = C
With key and center tap / with oil seal[2]..... = D

(1) 13bit only supports FRLS05/10/20/40,FRMS75,FRMM1K
(2) FRLS 05/10 For the motor with oil seal,please contact Sales Representative

3.3 Motor cable

Code	1	2	3	4	5	6	7	8	9	10	11	12
Example	H	V	P	S	0	4	A	A	0	5	M	B

Type

HIWIN motor cable ..... = HVP

Capacity

Small capacity (50W~750W) .....= S
Medium capacity (1000W/2000W) .....= M

Number of pin

Motor cable without holding brake .....= 04
Motor cable with holding brake .....= 06

Motor side connector

AMP connector (50W~750W) ..... = A
Straight waterproof connector (1000W/2000W) ..... = B
L-type waterproof connector (1000W/2000W) ..... = C

Drive side connector

Open cable ends (50W~1000W) .....= A
R-type terminals (2000W) .....= B

Cable length

3M.....= 03M
5M.....= 05M
7M.....= 07M
10M.....= 10M

Cable type

Highly flexible ..... = B

3.4 Encoder cable

Code	1	2	3	4	5	6	7	8	9	10	11	12
Example	H	V	E	1	7	I	A	B	0	5	M	B

Type

HIWIN encoder cable..... = HVE

Encoder Type

13bit incremental encoder .....= 13I
HIWIN 17 incremental encoder .....= 17I
17bit absolute encoder.....= 17A

Encoder connector

AMP connector (50W~750W) ..... = A
Straight waterproof connector (1000W/2000W) ..... = B
L-type waterproof connector (1000W/2000W) ..... = C

Drive side connector

SCR connector..... = B

Cable length

3M.....= 03M
5M.....= 05M
7M.....= 07M
10M.....= 10M

Cable type

Highly flexible .....= B

4. Interface Directions

4.1 Frame A-C

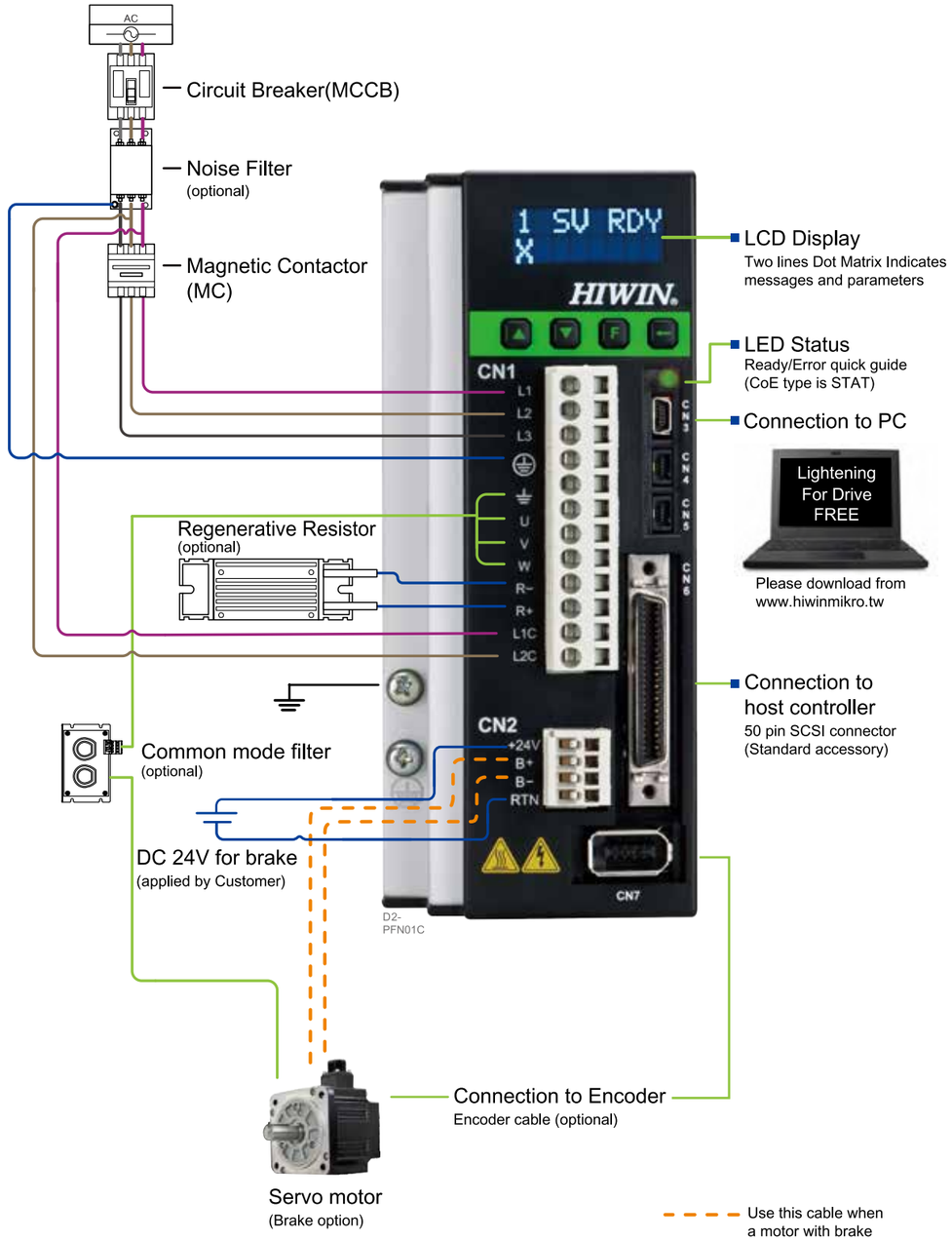

4.2 Frame D

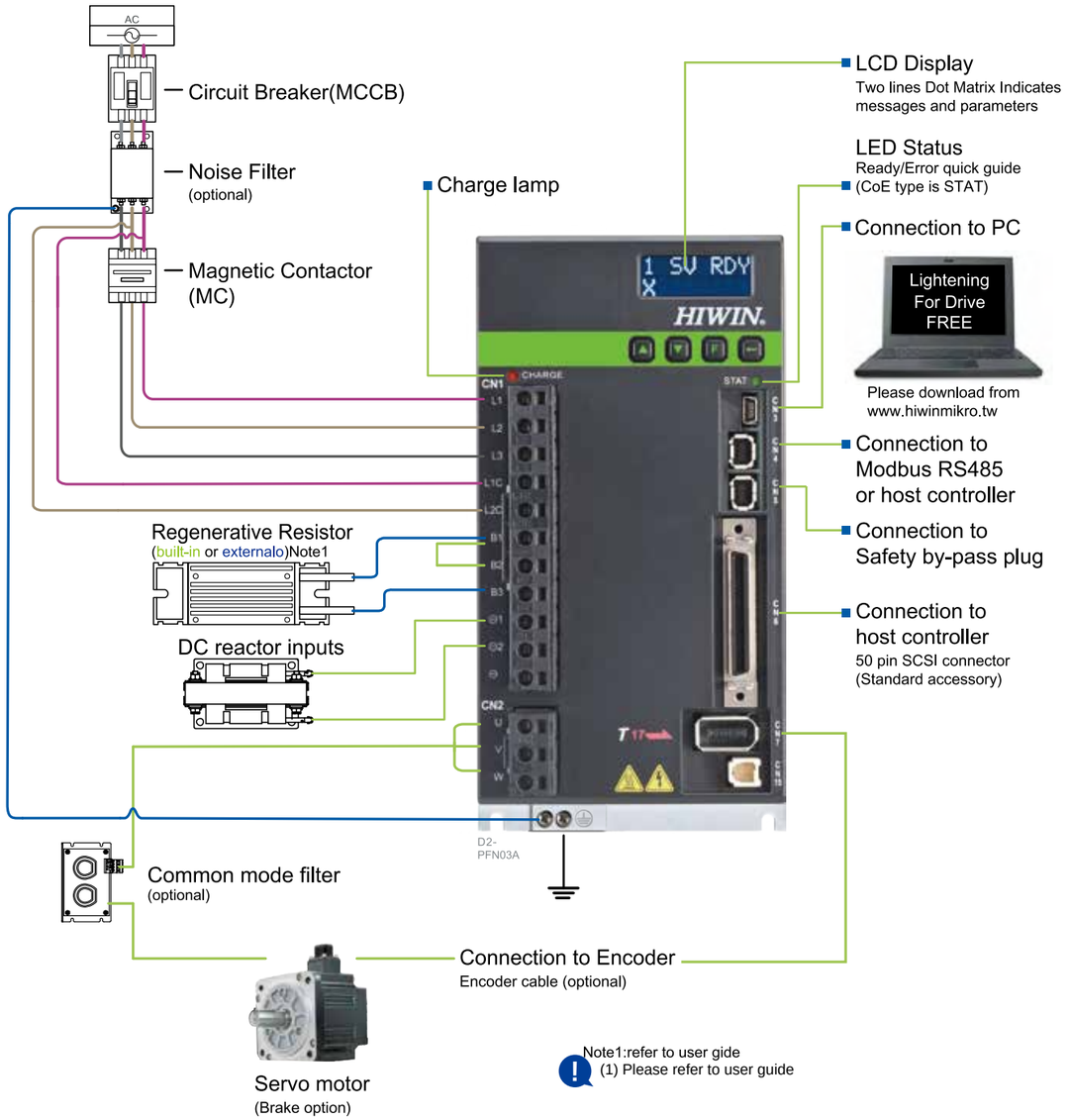

Note1:refer to user gide
(1) Please refer to user guide

5. Part numbers and options

Name	Motor cable				Encoder cable	Other accessories
50W | 750W	without brake			HVPS04AA	HVE13IAB HVE17IAB HVE17AAB	Control signal cable: LMACK02D Single phase EMC Pack: D2-EMC1 or D2-EMC3 3 phase EMC Pack: D2-EMC2 Common mode filter MF-CM-S DC reactor B86732G15L712
	with brake			HVPS06AA		
1000W	without brake	Straight type		HVPM04BA	HVE13IBB(Straight type) HVE17IBB(Straight type) HVE17ABB(Straight type) HVE13ICB(L-type) HVE17ICB(L-type) HVE17ACB(L-type)	
		L-type		HVPM04CA		
	with brake	Straight type		HVPM06BA		
		L-type		HVPM06CA		
2000W	without brake	Straight type		HVPM04BB	HVE17IBB(Straight type) HVE17ABB(Straight type) HVE17ICB(L-type) HVE17ACB(L-type)	
		L-type		HVPM04CB		
	with brake	Straight type		HVPM06BB		
		L-type		HVPM06CB		

Straight type : straight waterproof connector
L-type : waterproof connector

5.1 AC50W~AC750W－13bit incremental encoder

Motor					Drive			Optional parts						
								Motor cable(Note 2)		Encoder cable	D2 drive accessories			
Motor Series		Power supply	Output (W)	Part No. (Note 1)	Part No. (Standard interface)	Frame	Power capacity (Rated load)	without brake	with brake	13bit incremental (Note 2)	Control Signal Cable	Single phase EMC Pack (Note 3)	Three phase EMC Pack (Note 3)	External Regenerative Resistor
Low Inertia	FRLS	single phase/ three phase 220V	50	FRLS05205A4△	D2-0123-S-A0	Frame A	Approx. 0.4kVA	HVPS04AA□□□B	HVPS06AA□□□B	HVE13IAB□□□B	LMACK02D	D2-EMC1	D2-EMC2	N/A
				FRLS052B5A4△										
			100	FRLS10205A4△										
				FRLS102B5A4△										
			200	FRLS2020506△	D2-0423-S-B0	Frame B	Approx. 0.9kVA							RG1
				FRLS202B506△										
			400	FRLS4020506△										
				FRLS402B506△										
Middle inertia	FRMS		750	FRMS7520508△	D2-1023-S-C0	Frame C	Approx. 1.8kVA					D2-EMC3		RG2
				FRMS752B508△										

Note1 △ : Shaft End & Oil Seal Specification (Please refer to P.9)

Note3 EMC pack model (please refer to P.38)

Note2 Selection of cable / 50W~750W

■ Motor cable / without brake

HVPS04AA □□□ B

Cable length

3M..... =03M
5M..... =05M
7M..... =07M
10M..... =10M

Cable type

Highly flexible ..... = B

■ Motor cable and brake cable / with brake

HVPS06AA □□□ B

Cable length

3M..... =03M
5M..... =05M
7M..... =07M
10M..... =10M

Cable type

Highly flexible ..... = B

■ Encoder cable / 13bit incremental

HVE13IAB □□□ B

Cable length

3M.....=03M
5M.....=05M
7M.....=07M
10M.....=10M

Cable type

Highly flexible ..... = B

For more information about cables, please refer to P.52-P.58

5.2 AC1000W－13bit incremental encoder

Motor					Drive		Power capacity (Rated load)		Optional parts						
									Motor cable(Note 2)		Encoder cable	D2 drive accessories			
Motor Series		Power supply	Output (W)	Part No. (Note 1)	Part No. (Standard interface)	Frame			without brake	with brake	13bit incremental (Note 2)	Control Signal Cable	Single phase EMC Pack (Note 3)	Three phase EMC Pack (Note 3)	External Regenerative Resistor
Middle inertia	FRMM	single phase/ three phase 220V	1000	FRMM1K20513△	D2-1023-S-C0	Frame C	Approx. 1.8kVA		HVPM04□A□□□B	HVPM06□A□□□B	HVE13I□B□□□B	LMACK02D	D2-EMC3	D2-EMC2	RG2
				FRMM1K2B513△											

Note1 △ ：Shaft End & Oil Seal Specification (Please refer to P.9)

Note3 EMC pack model (please refer to P.38)

Note2 Selection of cable / 1000W

■ Motor cable / without brake

HVPM04□A□□□ B

Motor side connector
Straight Type .....=B
L-Shaped Type ....=C

Cable length
3M.....=03M
5M.....=05M
7M.....=07M
10M.....=10M

Cable type
Highly flexible .....= B

For more information about cables, please refer to P.52-P.58

■ Motor cable and brake cable / with brake

HVPM06□A□□□ B

Motor side connector
Straight Type .....=B
L-Shaped Type ....=C

Cable length
3M.....=03M
5M.....=05M
7M.....=07M
10M.....=10M

Cable type
Highly flexible .....= B

Note5 Medium capacity motor brake power cables are packaged.
Item number HVPM06:
Contains one motor cable and brake cable labeled with HVPM04 and HVPM02.

■ Encoder cable / 13bit incremental

HVE13I□B□□□ B

Motor side connector
Straight Type .....=B
L-Shaped Type ....=C

Cable length
3M.....=03M
5M.....=05M
7M.....=07M
10M.....=10M

Cable type
Highly flexible .....= B

5.3 AC50W~AC750W－17bit incremental encoder

Motor					Drive		Power capacity (Rated load)	Optional parts						
								Motor cable(Note 2)		Encoder cable	D2 drive accessories			
Motor Series		Power supply	Output (W)	Part No. (Note 1)	Part No. (Standard interface)	Frame		without brake	with brake	17bit incremental (Note 2)	Control Signal Cable	Single phase EMC Pack (Note 3)	Three phase EMC Pack (Note 3)	External Regenerative Resistor
Low Inertia	FRLS	single phase/ three phase 220V	50	FRLS05206A4Δ	D2T-0123-S-A4	Frame A	Approx. 0.4kVA	HVPS04AA□□□B	HVPS06AA□□□B	HVE17IAB□□□B	LMACK02D	D2-EMC1	D2-EMC2	N/A
				FRLS052B6A4Δ										
			100	FRLS10206A4Δ										
				FRLS102B6A4Δ										
			200	FRLS2020606Δ	D2T-0423-S-B4	Frame B	Approx. 0.9kVA							RG1
				FRLS202B606Δ										
			400	FRLS4020606Δ										
				FRLS402B606Δ										
Middle inertia	FRMS		50	FRMS0520604Δ	D2T-0123-S-A4	Frame A	Approx. 0.4KVA					D2-EMC3		RG2
				FRMS052B604Δ										
			100	FRMS1020604Δ										
				FRMS102B604Δ										
			400	FRMS4B20606Δ	D2T-0423-S-B4	Frame B	Approx. 0.9KVA							
				FRMS4B2B606Δ										
			750	FRMS7520608Δ	D2T-1023-S-C4	Frame C	Approx. 1.8KVA							
				FRMS752B608Δ										

Note1 Δ：Shaft End & Oil Seal Specification (Please refer to P.9)

Note3 EMC pack model (please refer to P.38)

Note2 Selection of cable / 50W~750W

■ Motor cable / without brake

HVPS04AA □□□ B

Cable length
- 3M..... =03M
- 5M..... =05M
- 7M..... =07M
- 10M..... =10M

Cable type
- Highly flexible ..... = B

■ Motor cable and brake cable / with brake

HVPS06AA □□□ B

Cable length
- 3M..... =03M
- 5M..... =05M
- 7M..... =07M
- 10M..... =10M

Cable type
- Highly flexible ..... = B

■ Encoder cable / 17bit incremental

HVE17IAB □□□ B

Cable length
- 3M..... =03M
- 5M..... =05M
- 7M..... =07M
- 10M..... =10M

Cable type
- Highly flexible ..... = B

For more information about cables, please refer to P.52-P.58

5.4 AC1000W/AC2000W－17bit incremental encoder

Motor					Drive		Power capacity (Rated load)		Optional parts						
									Motor cable(Note 2)		Encoder cable	D2 drive accessories			
Motor Series		Power supply	Output (W)	Part No. (Note 1)	Part No. (Standard interface)	Frame			without brake	with brake	17bit incremental (Note 2)	Control Signal Cable	Single phase EMC Pack (Note 3)	Three phase EMC Pack (Note 3)	External Regenerative Resistor
Middle inertia	FRMM	single phase/ three phase 220V	1000	FRMM1K20613△	D2T-1023-S-C4	Frame C	Approx. 1.8kVA		HVPM04□A□□□B	HVPM06□A□□□B	HVE17I□B□□□B	LMACK02D	D2-EMC3	D2-EMC2	RG2
				FRMM1K2B613△											
		three phase 220V	2000	FRMM2K20613△	D2T-2032-S-D4	Frame D	Approx. 3.5kVA		HVPM04□B□□□B	HVPM06□B□□□B					
				FRMM2K2B613△											

Note1 △ : Shaft End & Oil Seal Specification (Please refer to P.9)

Note3 EMC pack model (please refer to P.38)

Note2 Selection of cable / 1000W, 2000W

■ Motor cable / without brake

HVPM04□ A □□□ B

Motor side connector
Straight Type .....=B
L-Shaped Type ....=C

Drive side connector
Open cable ends ..... =A
R-type terminals ..... =B

Cable length
3M..... =03M
5M..... =05M
7M..... =07M
10M..... =10M

Cable type
Highly flexible ..... = B

For more information about cables, please refer to P.52-P.58

■ Motor cable and brake cable / with brake

HVPM06□ A □□□ B

Motor side connector
Straight Type .....=B
L-Shaped Type ....=C

Drive side connector
Open cable ends ..... =A
R-type terminals ..... =B

Cable length
3M..... =03M
5M..... =05M
7M..... =07M
10M..... =10M

Cable type
Highly flexible ..... = B

Note5 Medium capacity motor brake power cables are packaged.
Item number HVPM06:
Contains one motor cable and brake cable labeled with HVPM04 and HVPM02.

■ Encoder cable / 17bit incremental

HVE17I□B□□□ B

Motor side connector
Straight Type .....=B
L-Shaped Type ....=C

Cable length
3M.....=03M
5M.....=05M
7M.....=07M
10M.....=10M

Cable type
Highly flexible .....= B

5.5 AC50W~AC750W－17bit absolute encoder

Motor					Drive		Power capacity (Rated load)	Optional parts						
								Motor cable(Note 2)		Encoder cable	D2 drive accessories			
Motor Series		Power supply	Output (W)	Part No. (Note 1)	Part No. (Standard interface)	Frame		without brake	with brake	17bit absolute (Note 2)	Control Signal Cable	Single phase EMC Pack (Note 3)	Three phase EMC Pack (Note 3)	External Regenerative Resistor
Low Inertia	FRLS	single phase/ three phase 220V	50	FRLS05204A4Δ	D2T-0123-S-A5	Frame A	Approx. 0.4KVA	HVPS04AA□□□B	HVPS06AA□□□B	HVE17AAB□□□B	LMACK02D	D2-EMC1	D2-EMC2	N/A
				FRLS052B4A4Δ										
			100	FRLS10204A4Δ										
				FRLS102B4A4Δ										
			200	FRLS2020406Δ	D2T-0423-S-B5	Frame B	Approx. 0.9kVA							RG1
				FRLS202B406Δ										
			400	FRLS4020406Δ										
				FRLS402B406Δ										
Middle inertia	FRMS		50	FRMS0520404Δ	D2T-0123-S-A5	Frame A	Approx. 0.4KVA					D2-EMC3		RG2
				FRMS052B404Δ										
			100	FRMS1020404Δ										
				FRMS102B404Δ										
			400	FRMS4B20406Δ	D2T-0423-S-B5	Frame B	Approx. 0.9KVA							
				FRMS4B2B406Δ										
			750	FRMS7520408Δ	D2T-1023-S-C5	Frame C	Approx. 1.8KVA							
				FRMS752B408Δ										

Note1 Δ ：Shaft End & Oil Seal Specification (Please refer to P.9)

Note3 EMC pack model (please refer to P.38)

Note2 Selection of cable / 50W~750W

■ Motor cable / without brake

HVPS04AA □□□ B

Cable length

3M..... =03M
5M..... =05M
7M..... =07M
10M..... =10M

Cable type

Highly flexible ..... = B

■ Motor cable and brake cable / with brake

HVPS06AA □□□ B

Cable length

3M..... =03M
5M..... =05M
7M..... =07M
10M..... =10M

Cable type

Highly flexible ..... = B

■ Encoder cable / 17bit absolute

HVE17AAB □□□ B

Cable length

3M.....=03M
5M.....=05M
7M.....=07M
10M.....=10M

Cable type

Highly flexible ..... = B

! For more information about cables, please refer to P.52-P.58

5.6 AC1000W/AC2000W－17bit absolute encoder

Motor					Drive				Optional parts						
									Motor cable(Note 2)		Encoder cable	D2 drive accessories			
Motor Series		Power supply	Output (W)	Part No. (Note 1)	Part No. (Standard interface)	Frame	Power capacity (Rated load)		without brake	with brake	17bit absolute (Note 2)	Control Signal Cable	Single phase EMC Pack (Note 3)	Three phase EMC Pack (Note 3)	External Regenerative Resistor
Middle inertia	FRMM	single phase/ three phase 220V	1000	FRMM1K20413△	D2T-1023-S-C5	Frame C	Approx. 1.8kVA		HVPM04□A□□□B	HVPM06□A□□□B	HVE17A□B□□□B	LMACK02D	D2-EMC3	D2-EMC2	RG2
				FRMM1K2B413△											
		three phase 220V	2000	FRMM2K20413△	D2T-2032-S-D5	Frame D	Approx. 3.5kVA		HVPM04□B□□□B	HVPM06□B□□□B					
				FRMM2K2B413△											

Note1 △ : Shaft End & Oil Seal Specification (Please refer to P.9)

Note3 EMC pack model (please refer to P.38)

Note2 Selection of cable / 1000W, 2000W

■ Motor cable / without brake

HVPM04□ A □□□ B

Motor side connector
Straight Type .....=B
L-Shaped Type ....=C

Drive side connector
Open cable ends ..... =A
R-type terminals ..... =B

Cable length
3M..... =03M
5M..... =05M
7M..... =07M
10M..... =10M

Cable type
Highly flexible ..... = B

For more information about cables, please refer to P.52-P.58

■ Motor cable and brake cable / with brake

HVPM06□ A □□□ B

Motor side connector
Straight Type .....=B
L-Shaped Type ....=C

Drive side connector
Open cable ends ..... =A
R-type terminals ..... =B

Cable length
3M..... =03M
5M..... =05M
7M..... =07M
10M..... =10M

Cable type
Highly flexible ..... = B

Note5 Medium capacity motor brake power cables are packaged.
Item number HVPM06:
Contains one motor cable and brake cable labeled with HVPM04 and HVPM02.

■ Encoder cable / 17bit absolute

HVE17A□B□□□ B

Motor side connector
Straight Type .....=B
L-Shaped Type ....=C

Cable length
3M..... =03M
5M..... =05M
7M..... =07M
10M..... =10M

Cable type
Highly flexible ..... = B

6. Servo Drive

6.1 Servo drive with standard interface

Specifications

Input power	220V	Main power	Frame A~C	Single/three-phase, 200 to 240V 50/60Hz
			Frame D	Three-phase,200-240 Vac 50/60Hz
		Control power	Frame A~D	Single phase, 200 to 240V 50/60Hz
Environment		Temperature		Operation Temperature: 0˚C~45˚C (If temperature is higher than 45˚C, ventilation is needed) Storage Temperature: -20˚C~65˚C
		Humidity		0 to 90%RH (no frost)
		Altitude		Under 1000 Meters
		Vibration		1G (10 to 500Hz)
Control method				IGBT PWM space vector control
Encoder feedback				13bit incremental 17bit incremental Dual loop (Full closed loop) and 17bit absolute
I/O signal connector	Control signal		Input	General purpose 9 inputs (D2T:10)
			Output	General purpose 4 outputs (D2T:5)
	Analog signal		Input	1 input (12bit A/D)
			Output	2 outputs (Analog monitor-under construction)
	Pulse signal		Input	2 inputs (Low speed channel, High speed channel)
			Output	4 outputs (Line drive: 3output, open collector: 1 output)
Brake connector	Control signal		Output	Direct brake connection. (no need of extra relay for brake) Also programmable for general purpose output
Communication function			USB	Connection with PC, 115200bps
Front panel				Dot matrix 2*8 characters LCD with 4 buttons LED(green, red)
Regenerative function			Frame A-C	Need external connection, no internal regenerative resistor
			Frame D	Built in or external regenerative resistor (option), 13Ω±5%, continue power 120W, Peak power 600W
Control mode				Switching among the following modes is possible (1)Position control (2)Velocity control (3)Torque control (4)Position/Velocity control (5)Position/Torque control (6)Velocity/Torque control
Dynamic brake			Frame A-C	N/A
			Frame D	Built in line resistance: 2.6 Ω ± 5%, continuous power: 120 W, peak power: 600 W

Functions

Position control	Control input		(1)Axis enable; (2)Left and right limit switch; (3)Home OK, start err. map; (4)Reset amplifier; (5)Near home sensor; (6)Clear error; (7)Switch to secondary CG and vpg; (8)Inhibit pulse command; (9)Switch HI/LO pulse input; (10)Abort motion; (11)Switch to secondary mode; (12)Start homing; (13)Electronic gear select (DIV1/DIV2)
	Control output		(1)Brake; (2)Servo ready; (3)Axis disable; (4)In-position; (5)Moving; (6)Homed; (7)Emulated index; (8)Zero speed detected; (9)Errors
	Pulse input	Max. command pulse frequency	Dedicated interface for Photo-coupler(single end input): 500kpps Dedicated interface for line drive(differential input): 4Mpps(16M cnt/s with AqB)
		Input pulse signal format	(1)Pulse and Direction (2)Pulse Up/Pulse Down (3)Quadrature(AqB)
		Electronic gear (Division/ Multiplication of command pulse)	Gear ratio : pulses/counts pulses : 1~2, 147, 483, 647 counts : 1~2, 147, 483, 647
		Smoothing filter	Smooth factor : 1~500 (0: no smoothing filter)
	Vibration suppression filter(VSF)		VSF can remove the vibration frequency that occurs during movement. It can reduce the vibration caused by the system's structure and improve the machine's productivity.
Velocity control	Control input		(1)Axis enable; (2)Left and right limit switch; (3)Home OK, start err. map; (4)Reset amplifier; (5)Near home sensor; (6)Clear error; (7)Invert V command; (8)Switch to secondary CG and vpg; (9)Zero speed clamp; (10)Abort motion; (11)Switch to secondary mode
	Control output		(1)Brake; (2)Servo ready; (3)Axis disable; (4)In-position; (5)Moving; (6)Homed; (7)Emulated index; (8)Zero speed detected; (9)Errors
	PWM input	Velocity command input	Speed command input can be provided by means of duty cycle of PWM input. Parameter are used for scale setting and command polarity.
	Analog Input	Velocity command input	Speed instruction can be set with analog voltage method, parameters can set ratio and direction +/-10V
	Zero speed clamp		Zero speed clamp input is possible.
Torque control	Control input		(1)Axis enable; (2)Left and right limit switch; (3)Home OK, start err. map; (4)Reset amplifier; (5)Near home sensor; (6)Clear error; (7)Invert V command; (8)Switch to secondary CG and vpg; (9)Switch to secondary mode
	Control output		(1)Brake; (2)Servo ready; (3)Axis disable; (4)In-position; (5)Moving; (6)Homed; (7)Emulated index; (8)Zero speed detected; (9)Errors
	PWM input	Torque command input	Torque command input can be provided by means of duty cycle of PWM input. Parameter are used for scale setting and command polarity.
	Analog Input	Torque command input	Torque command input can be provided by means of analog voltage. Parameter are used for scale setting and command polarity.
	Speed limit function		Speed limit value with parameter is possible
Common	ZeroTune		ZeroTune can find the porper gains by clicking one button on LCD when the motor is disable.
	Emulated encoder feedback output		Set up of any value is possible (frequency up to 18M cnt/s, only frame D drive up to 9M cnt/s)
	Protective function		(1)Motor short detection; (2)Over voltage; (3)Position error too big; (4)Encoder error; (5)Soft thermal threshold reached; (6)Motor maybe disconnect; (7)Amplifier over temperature; (8)Under voltage; (9)5V for encoder card fail; (10)Phase init. error; (11)Serial encoder communication error; (12)Hall sensor error; (13)Current control error; (14)Hybrid deviation too big; (15)HFLT inconsistent error; (16)Incompatible motor model for drive; (17)DC bus voltage abnormal; (18)EtherCAT interface disconnected
	Error log		Errors and warnings are saved in non-volatile memory
	Error Mapping		Method: Established compensation table to compensate encoder error by linear interpolation
			Samples: Maximum 5,000 point
			Storage: Flash ROM, Disc file
			Unit: count
			Activation: Activated internally by home complete, or activated externally by input signal
	Others		Friction compensation, Backlash compensation

6.2 Wiring diagram

Single-phase

Recommended models: FN2090-6-06 filter	
Maximum continuous operating voltage	250VAC, 50/60Hz
Operating Frequency	DC to 400Hz
Rated Current	6A@40˚C
Surge pulse protection	2kV, IEC 61000-4-5

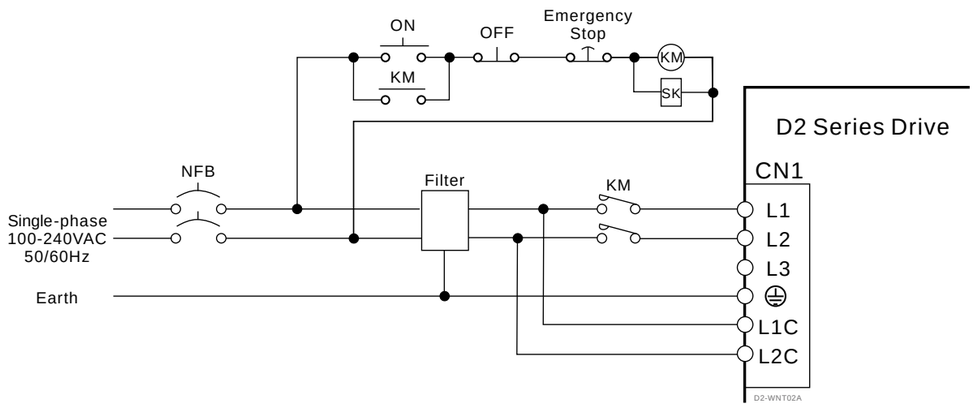

Three-phase

Recommended models: FN3025L-20-71 filter	
Maximum continuous operating voltage	3x520/300 VAC
Operating Frequency	DC to 400Hz
Rated Current	20A@50˚C

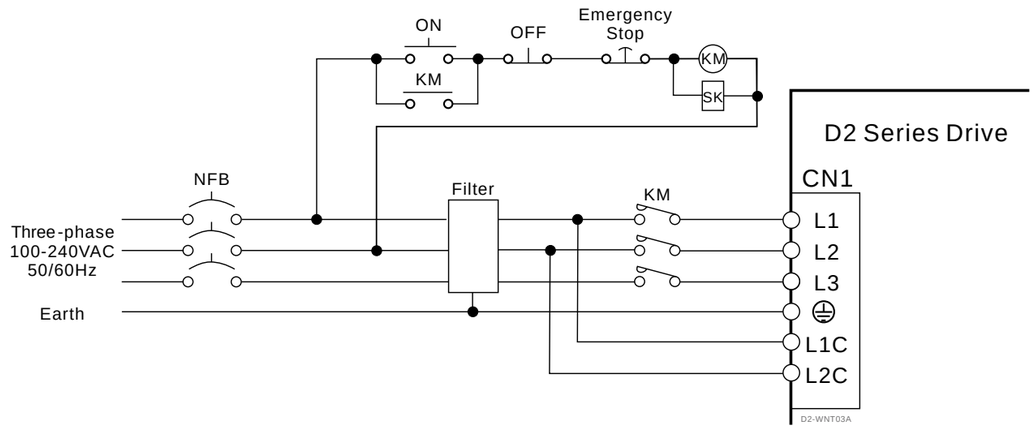

6.3 Control circuit

Wiring Example of Position Control Mode

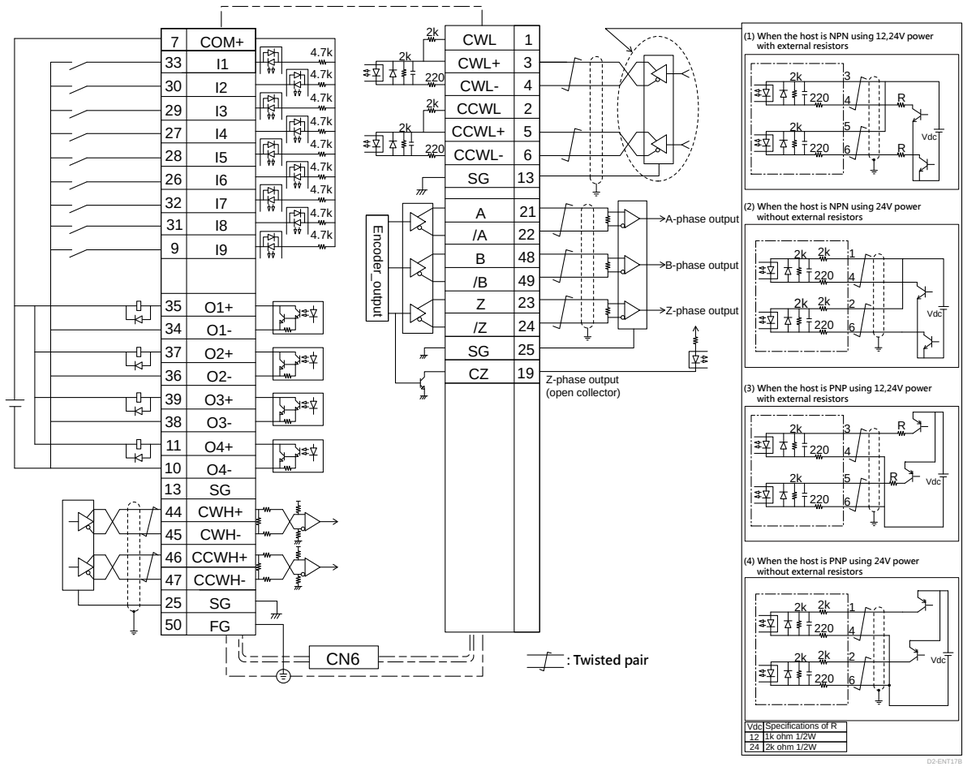

Wiring Example of Velocity/Torque Control Mode

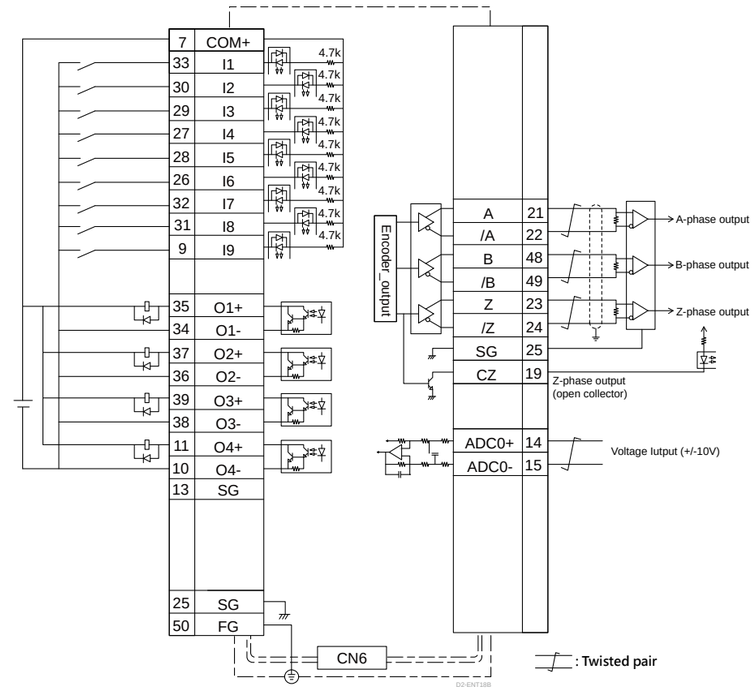

Additional I/O pins (Only for D2T drive)

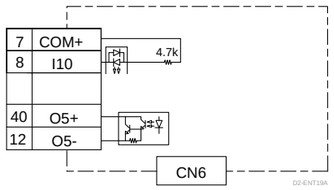

6.4 Dimensions of drive

Frame A (D2x-01xx-S(T)-Ax)

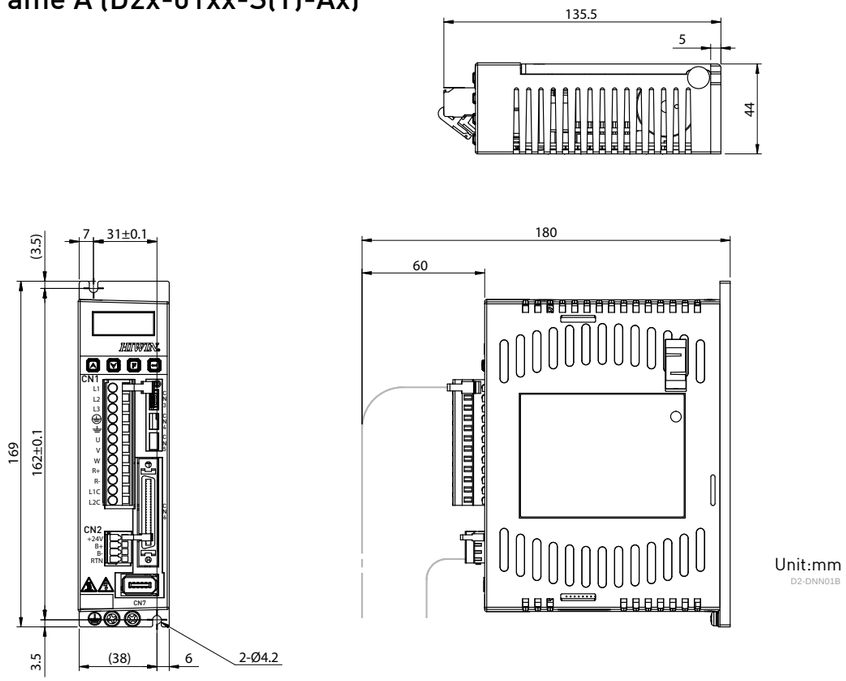

Frame B (D2x-04xx-S(T)-Bx)

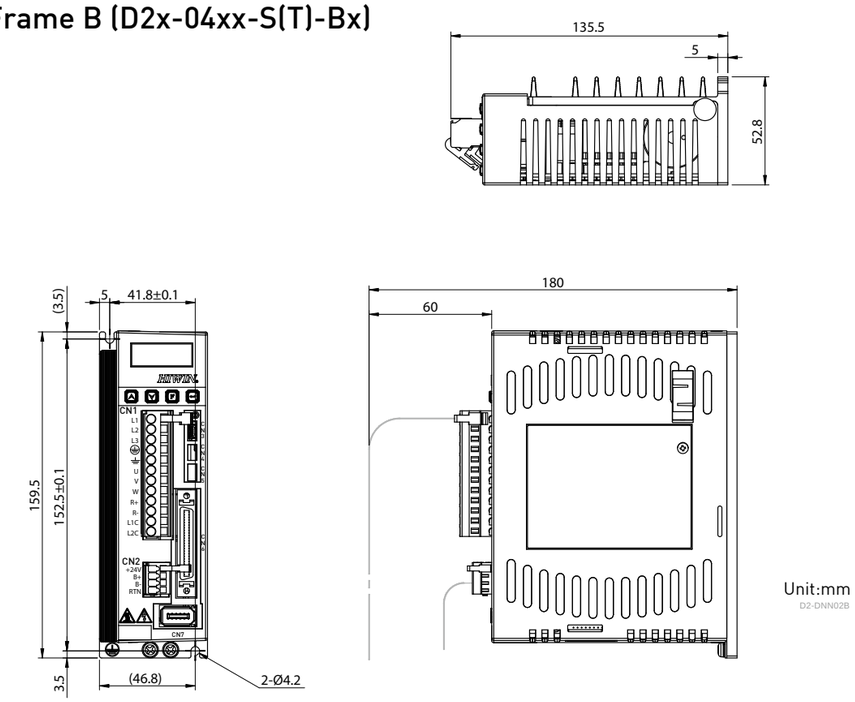

Frame C (D2x-10xx-S(T)-Cx)

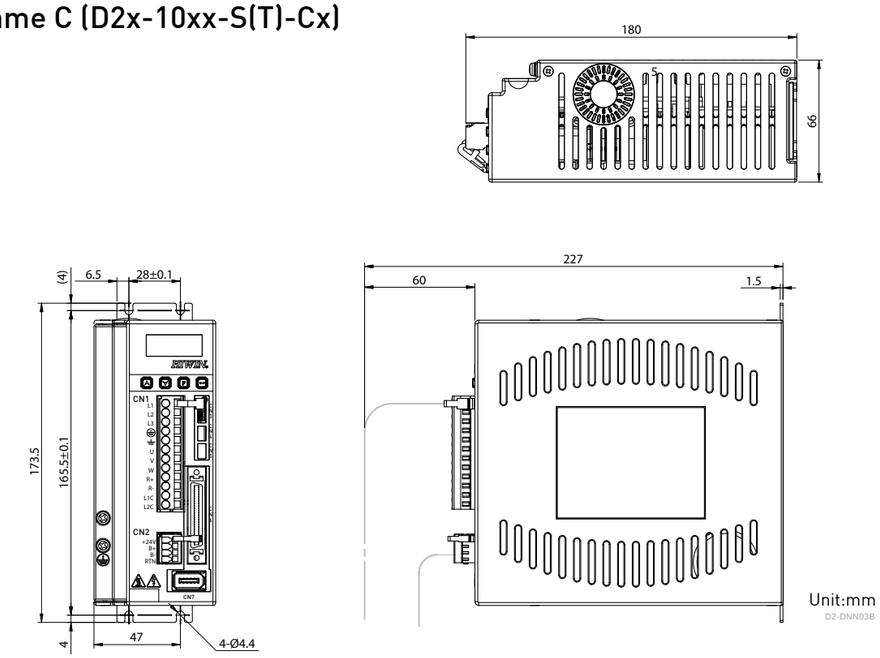

Frame D (D2x-20xx-S(T)-Dx)

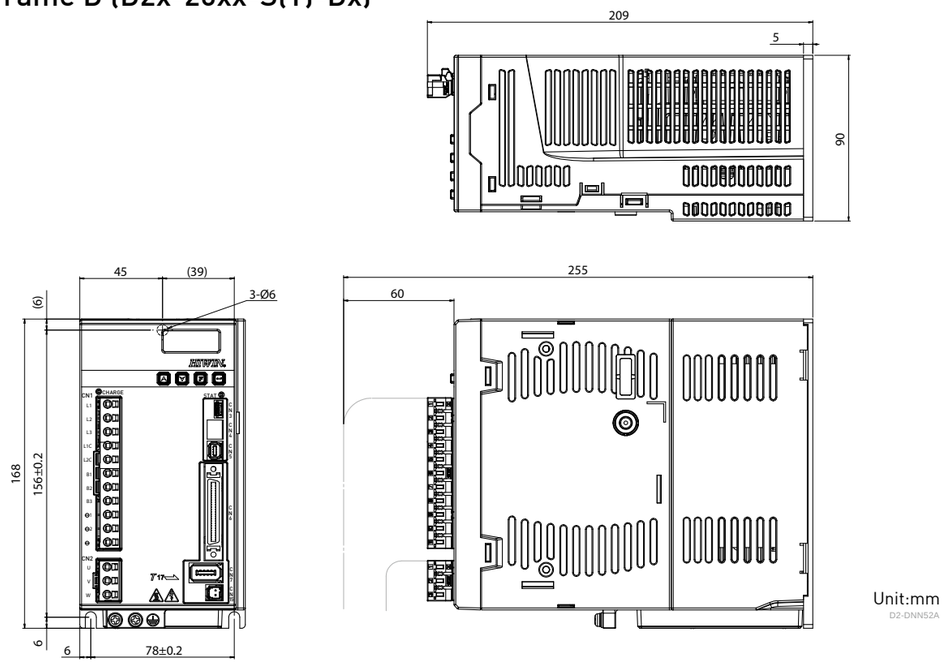

Frame A (D2x-01xx-E(Note)-Ax)

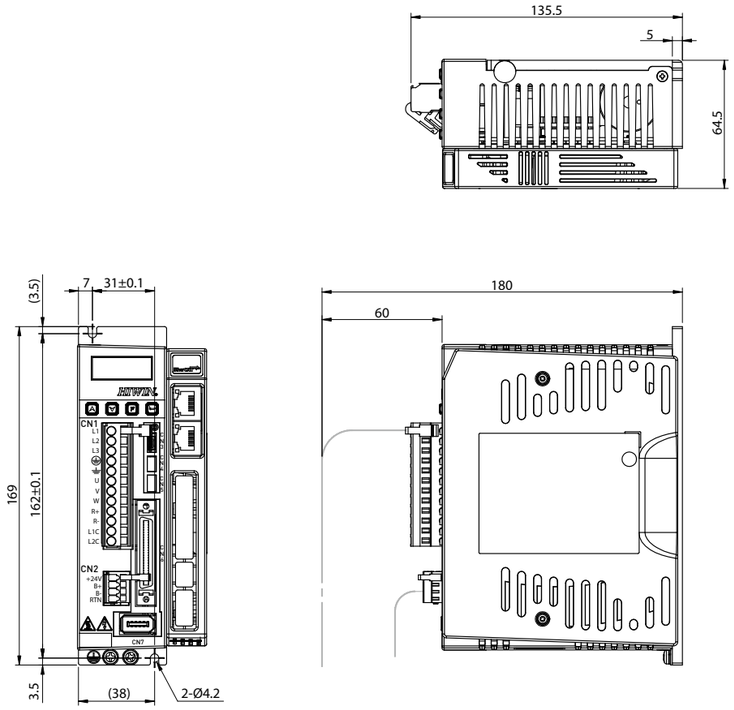

Unit:mm
D2-DNN49B

Frame B (D2x-04xx-E(Note)-Bx)

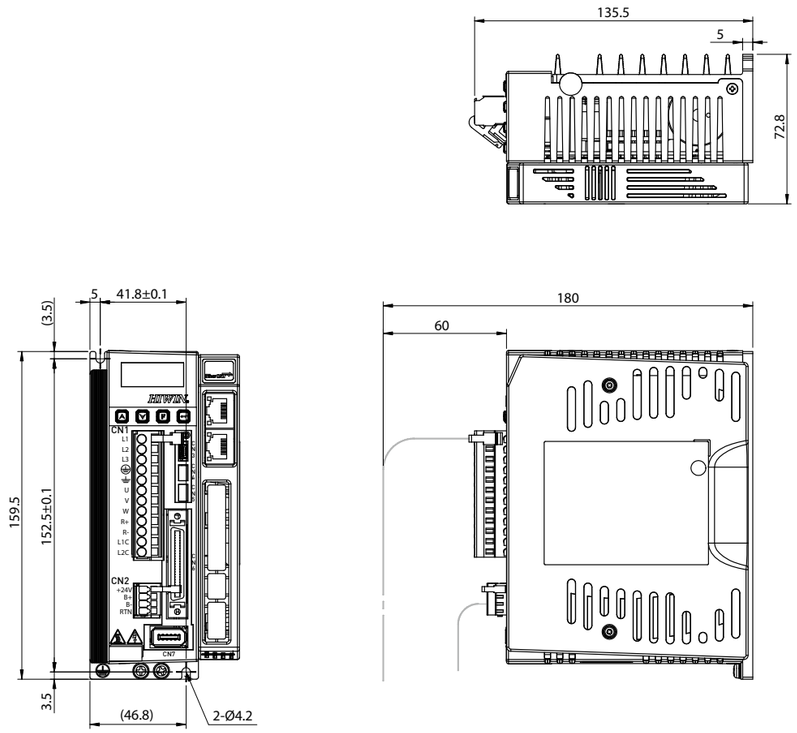

Unit:mm
D2-DNN50B

Frame C (D2x-10xx-E(Note)-Cx)

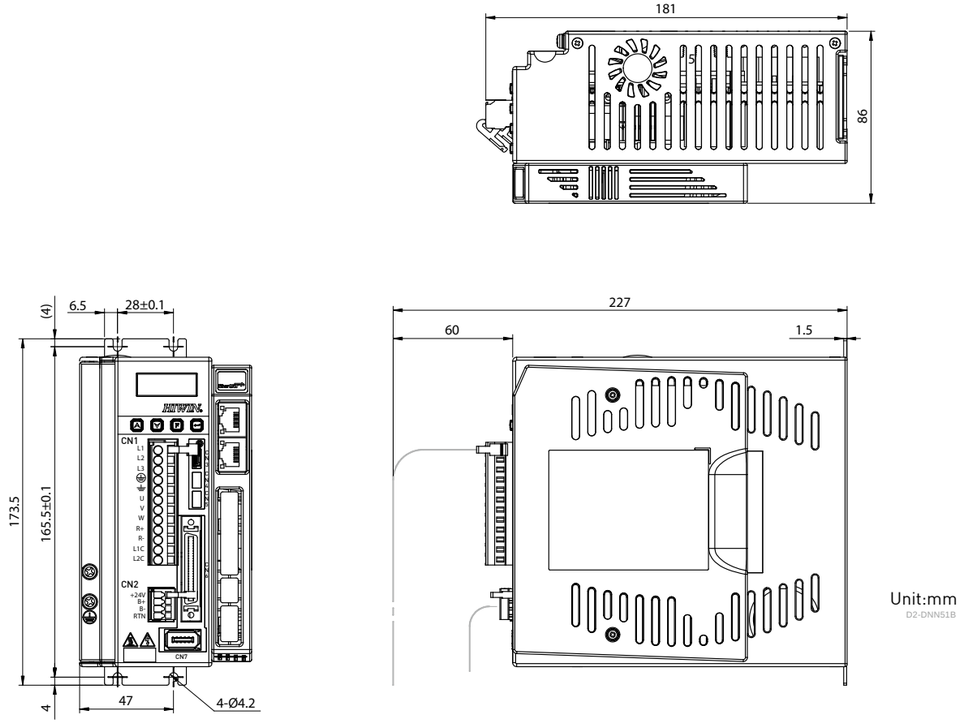

Unit:mm
D2-DNN51B

Frame D (D2x-20xx-E(Note)-Dx)

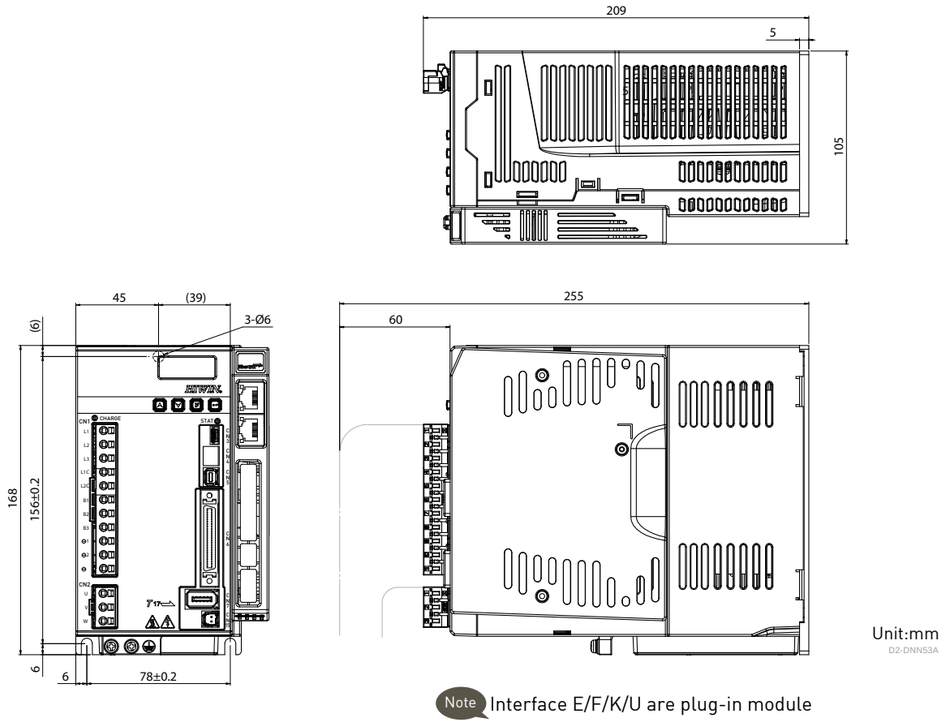

Unit:mm
D2-DNN53A

Note Interface E/F/K/U are plug-in module

6.5 Drive peripheral kits

Connector Kit

Part Name	Model		Description	Quantity
Frame A-C	D2-CK3	CN1	Main power, motor power, regenerative resistor and control power connector / 12pins, pitch5mm (051500400249)	1
		CN2	Brake connector: 4pins, pitch 3.5mm (051500400285)	1
		CN6	Control signal connector: 50 pins welded type(051500100127)	1
		CN1	Connector fixture tool (051800400035)	1
		CN2	Connector fixture tool (051800400066)	1
Frame D (with Modbus interface)	D2-CK4	CN1	Connectors of AC power, drive control power, regenerative resistor, and DC reactor. 11 pins, TE 1-2229794-1-PT1.	1
		CN2	Motor power connector. 3 pins, TE 3-22297894-1.	1
		CN4	Connector kit for serial communication. TE 2040008-1.	1
		CN5	Safety function connector. TE 1971153-1.	1
		CN6	Control signal connector. 50 pins, welded type, EUMAX XDR-10350AS.	1
		CN1 CN2	Connector fixture tools: TE 1981045-1.	2
Frame D	D2-CK5	CN1	Connectors of AC power, drive control power, regenerative resistor, and DC reactor. 11 pins, TE 1-2229794-1-PT1.	1
		CN2	Motor power connector. 3 pins,TE 3-22297894-1.	1
		CN5	Safety function connector. TE 1971153-1.	1
		CN6	Control signal connector. 50 pins welded type, EUMAX XDR-10350AS.	1
		CN1 CN2	Connector fixture tools: TE 1981045-1.	2

EMC Accessory Kit

Part Name	Model	Description	Quantity
D2 EMC accessory kit for single phase	D2-EMC1 (051800200074)	Single phase filter FN2090-6-06 for 50W to 400W (Rated current:6A, leakage current: 0.67mA)	1
		EMI core KCF-130-B	2
	D2-EMC3 (051800200077)	Single phase filter FN2090-10-06 for 750W and 1000W (Rated current:10A, leakage current: 0.67mA)	1
		EMI magnet rings KCF-130-B	2
D2 EMC accessory kit for three phase	D2-EMC2 (051800200075)	Three phase filter FN3025HL-20-71 (Rated current:20A, leakage current:0.4mA)	1
		EMI magnet rings KCF-130-B	2
	D2-EMC4 (051800200078)	Three phase filter B84743C0035R166 (Rated current:35A, leakage current: <0.5mA)	1
		EMI magnet rings KCF-130-B	2

EMI magnetic rings are applied on main power cables, motor power cables, encoder wires or pulse control wires respectively.

1. The leakage current of some models' noise filters is large. Therefore the leakage current will increase due to the ground conditions. When applying leak detectors and leakage circuit breakers, please consider on the basis of ground conditions and noise filters issues how to select. Please contact noise filter manufacturers for details.
2. The filter can be connected to more than one drive if the total maximum load current does not exceed the rated current.

Regenerative Resistor

Part Name	Model	Description	L1	L2	W	H	L
Regenerative resistor	RG1	68Ω Rated power 100W Peak power 500W (050100700001)	165 ± 2	150 ± 2	40 ± 0.5	40 ± 0.5	500
	RG2	120Ω Rated power 300W Peak power 1500W (050100700009)	215 ± 2	200 ± 2	60 ± 0.5	30 ± 0.5	500

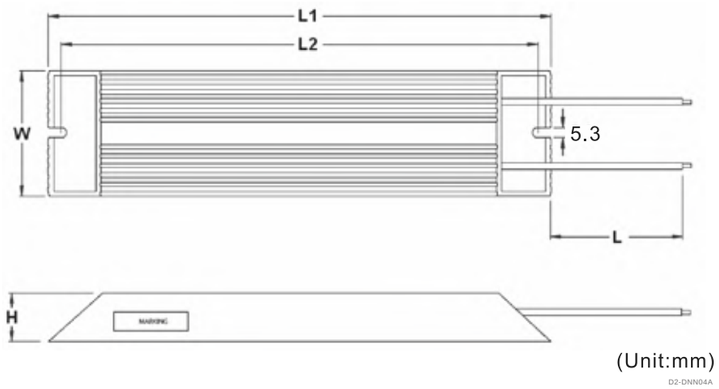

Common Mode Filter

Part Name	Model	Description	Quantity
Common mode filter	MF-CM-S (FF000MF11002)	Common mode inductance: 1100 μH (nominal) for 50W to 2000W (Voltage maximum: 373Vdc, Rated current: 11Arms)	1

DC Reactor

Part Name	Model	Description	Quantity
DC Reactor	B86732G15L712 (051800200126)	1-phase DC reactor for 2000W Rated Voltage : 440Vdc Rated current : 14.2A Inductance: 2.45mH(nominal)	1

7. Servo Motor

7.1 Motor specifications and application environment

Motor			Rated output (W)	Voltage	Rated speed (No-load maximum speed) (rpm)	Encoder	IP level	Application	Environment
Low Inertia	FRLS	 D2-PPN02A	50W	220V	3000 (4500)	13bit/17bit	IP65	Semiconductor Equipment Packaging Machine SMT Machine Food industry machine LCD equipment	■ Storage condition - Indoor illumination - Keep away from following environment a. corrosive gases b. flammable gas c. grease and dirt ■ Application temperature 0 ° C ~ 40 ° C ■ Storage Temperature -15 ° C ~ 70 ° C ■ Humidity 80% RH or less ■ Storage humidity 80% RH or less ■ Elevation above sea level 1000m under ■ Vibration resistance 49m/s² or less
		 D2-PPN03A	100W						
		 D2-PPN04A	200W						
		 D2-PPN05A	400W						

Motor			Rated output (W)	Voltage	Rated speed (No-load maximum speed) (rpm)	Encoder	IP level	Application	Environment
Middle inertia	FRMS		50W	220V	3000 (4500)	17bit	IP65	Semiconductor Equipment Packaging Machine SMT Machine Food industry machine LCD equipment	■ Storage condition - Indoor illumination - Keep away from following environment a. corrosive gases b. flammable gas c. grease and dirt ■ Application temperature 0 ° C ~ 40 ° C ■ Storage Temperature -15 ° C ~ 70 ° C ■ Humidity 80% RH or less ■ Storage humidity 80% RH or less ■ Elevation above sea level 1000m under ■ Vibration resistance 49m/s² or less
			100W						
			400W						
		 D2-PPN06A	750W			13bit/17bit			
	FRMM	 D2-PPN07A	1000W	220V	2000 (3000)	13bit/17bit		Machine Tools Conveyor Equipment Textile Machine Mechanical arm	
		 D2-PPN11A	2000W			17bit			

7.2 Low inertia, Small capacity

7.2.1 50W

Parameter	Symbol	Unit	FRLS052□□A4□
Drive Input Voltage	V	V	AC220
Rated Power	W	W	50
Rated Torque	Tc	N.m	0.16
Rated Current	Ic	A(rms)	0.9
Peak Max. Torque	Tp	N.m	0.48
Peak Max. Current	Ip	A(rms)	2.7
Rated Speed	ωc	rpm	3000
Max. Speed	ωp	rpm	4500
Torque Constant	Kt	N.m / Arms	0.178
Back EMF Constant	Ke	Vrms / krpm	10.74
Resistance (line to line)	R	Ω	4.7
Inductance (line to line)	L	mH	4.7
Inertia of Rotating Parts (with brake)	J	kg-m²(×10⁻⁴)	0.02(0.022)
Weight (with brake)	M	kg	0.45(0.58)
Motor Insulation Grade	Class A (UL)		
Motor protect	Total enclosed, self-cooled, IP65 (Except for shaft and connector)		
Insulation resistance	10MΩ, DC500V		
Insulation voltage resistance	AC1500V, 60 second		
Brake specifications (Note 1)			
Static friction torque (Minimum)	Tb	N.m	0.3
Magnetizing current	Ab	A	0.25A
Brake input voltage	V	V	DC24±10%
Suction time (Maximum)	to	ms	30
Release time (Maximum)	tr	ms	20

Note1 Brakes are for maintaining object stop. Do not apply for deceleration, dynamic brakeing or emergency stop. Brake suction and release times vary with different circuitries, please note the actual operation delay time during application.

■ Torque-Speed Curve

FRLS 50W Torque-Speed Curve

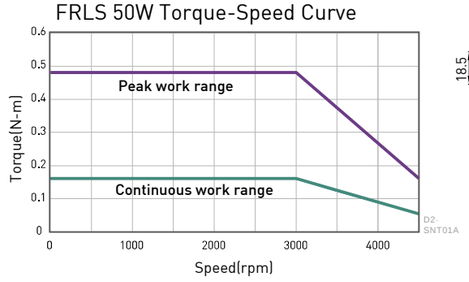

■ Dimensions

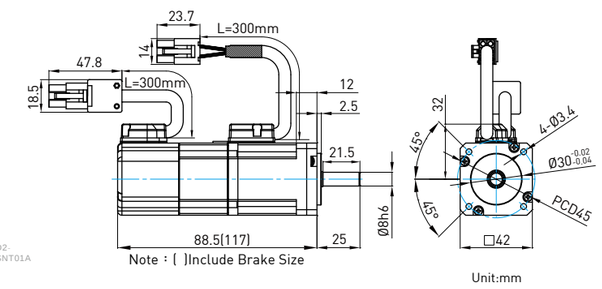

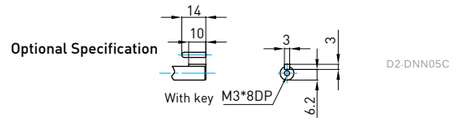

7.2.2 100W

Parameter	Symbol	Unit	FRLS102□□A4□
Drive Input Voltage	V	V	AC220
Rated Power	W	W	100
Rated Torque	Tc	N.m	0.32
Rated Current	Ic	A(rms)	0.9
Peak Max. Torque	Tp	N.m	0.96
Peak Max. Current	Ip	A(rms)	2.7
Rated Speed	ωc	rpm	3000
Max. Speed	ωp	rpm	4500
Torque Constant	Kt	N.m / Arms	0.356
Back EMF Constant	Ke	Vrms / krpm	21.98
Resistance (line to line)	R	Ω	8
Inductance (line to line)	L	mH	8.45
Inertia of Rotating Parts (with brake)	J	kg-m²(×10⁻⁴)	0.036(0.038)
Weight (with brake)	M	kg	0.63(0.76)
Motor Insulation Grade	Class A (UL)		
Motor protect	Total enclosed, self-cooled, IP65 (Except for shaft and connector)		
Insulation resistance	10MΩ, DC500V		
Insulation voltage resistance	AC1500V, 60 second		
Brake specifications (Note 1)			
Static friction torque (Minimum)	Tb	N.m	0.3
Magnetizing current	Ab	A	0.25A
Brake input voltage	V	V	DC24±10%
Suction time (Maximum)	to	ms	30
Release time (Maximum)	tr	ms	20

Note1 Brakes are for maintaining object stop. Do not apply for deceleration, dynamic brakeing or emergency stop.
Brake suction and release times vary with different circuitries, please note the actual operation delay time during application.

■ Torque-Speed Curve

FRLS 100W Torque-Speed Curve

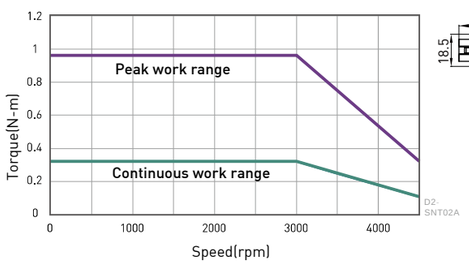

■ Dimensions

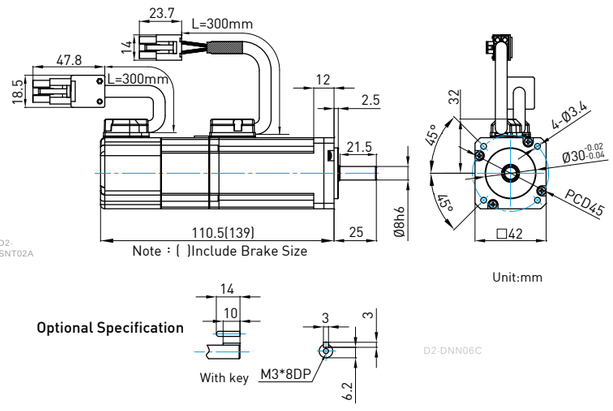

7.2.3 200W

Parameter	Symbol	Unit	FRLS202□□06□
Drive Input Voltage	V	V	AC220
Rated Power	W	W	200
Rated Torque	Tc	N.m	0.64
Rated Current	Ic	A(rms)	1.7
Peak Max. Torque	Tp	N.m	1.92
Peak Max. Current	Ip	A(rms)	5.1
Rated Speed	ωc	rpm	3000
Max. Speed	ωp	rpm	4500
Torque Constant	Kt	N.m / Arms	0.38
Back EMF Constant	Ke	Vrms / krpm	23
Resistance (line to line)	R	Ω	4.3
Inductance (line to line)	L	mH	13
Inertia of Rotating Parts (with brake)	J	kg-m²(×10⁻⁴)	0.17(0.21)
Weight (with brake)	M	kg	0.95(1.5)
Motor Insulation Grade	Class A (UL)		
Motor protect	Total enclosed, self-cooled, IP65 (Except for shaft and connector)		
Insulation resistance	10MΩ, DC500V		
Insulation voltage resistance	AC1500V, 60 second		
Brake specifications (Note 1)			
Static friction torque (Minimum)	Tb	N.m	1.3
Magnetizing current	Ab	A	0.32A
Brake input voltage	V	V	DC24±10%
Suction time (Maximum)	to	ms	30
Release time (Maximum)	tr	ms	20

Note1 Brakes are for maintaining object stop. Do not apply for deceleration, dynamic brakeing or emergency stop.
Brake suction and release times vary with different circuitries, please note the actual operation delay time during application.

■ Torque-Speed Curve

FRLS 200W Torque-Speed Curve

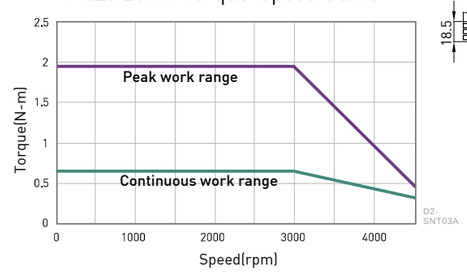

■ Dimensions

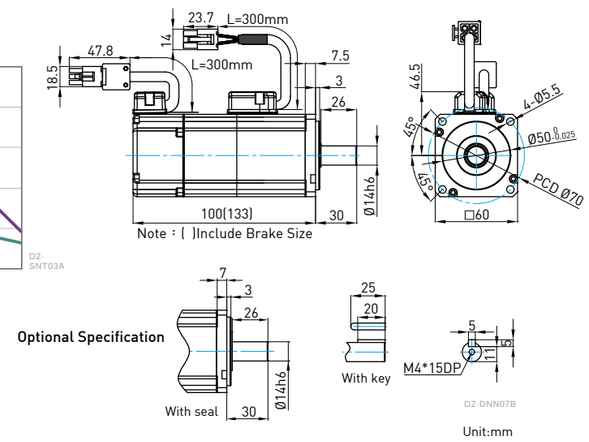

7.2.4 400W

Parameter	Symbol	Unit	FRLS402□□06□
Drive Input Voltage	V	V	AC220
Rated Power	W	W	400
Rated Torque	Tc	N.m	1.27
Rated Current	Ic	A(rms)	2.5
Peak Max. Torque	Tp	N.m	3.81
Peak Max. Current	Ip	A(rms)	7.5
Rated Speed	ωc	rpm	3000
Max. Speed	ωp	rpm	4500
Torque Constant	Kt	N.m / Arms	0.51
Back EMF Constant	Ke	Vrms / krpm	31.9
Resistance (line to line)	R	Ω	3.5
Inductance (line to line)	L	mH	13
Inertia of Rotating Parts (with brake)	J	kg-m²(×10⁻⁴)	0.27 (0.31)
Weight (with brake)	M	kg	1.31(1.86)
Motor Insulation Grade	Class A (UL)		
Motor protect	Total enclosed, self-cooled, IP65 (Except for shaft and connector)		
Insulation resistance	10MΩ, DC500V		
Insulation voltage resistance	AC1500V, 60 second		
Brake specifications (Note 1)			
Static friction torque (Minimum)	Tb	N.m	1.3
Magnetizing current	Ab	A	0.32A
Brake input voltage	V	V	DC24±10%
Suction time (Maximum)	to	ms	30
Release time (Maximum)	tr	ms	20

Note1 Brakes are for maintaining object stop. Do not apply for deceleration, dynamic brakeing or emergency stop.
Brake suction and release times vary with different circuitries, please note the actual operation delay time during application.

■ Torque-Speed Curve

FRLS 400W Torque-Speed Curve

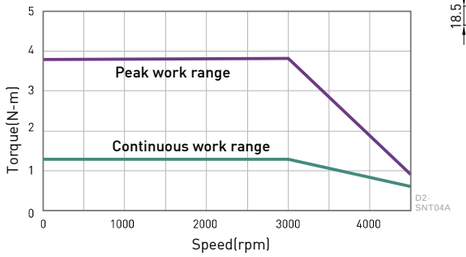

■ Dimensions

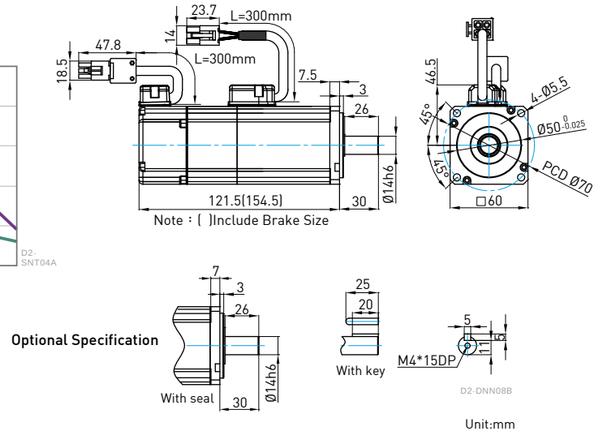

7.3 Middle inertia, Small capacity

7.3.1 50W

Parameter	Symbol	Unit	FRMS052□□04□
Drive Input Voltage	V	V	AC220
Rated Power	W	W	50
Rated Torque	Tc	N.m	0.16
Rated Current	Ic	A(rms)	0.9
Peak Max. Torque	Tp	N.m	0.48
Peak Max. Current	Ip	A(rms)	2.7
Rated Speed	ωc	rpm	3000
Max. Speed	ωp	rpm	4500
Torque Constant	Kt	N.m / Arms	0.178
Back EMF Constant	Ke	Vrms / krpm	11.51
Resistance (line to line)	R	Ω	13.17
Inductance (line to line)	L	mH	11.75
Inertia of Rotating Parts (with brake)	J	kg-m²(×10⁻⁴)	0.025(0.027)
Weight (with brake)	M	kg	0.38(0.51)
Motor Insulation Grade	Class A (UL)		
Motor protect	Total enclosed, self-cooled, IP65 (Except for shaft and connector)		
Insulation resistance	10MΩ, DC500V		
Insulation voltage resistance	AC1500V, 60 second		
Brake specifications (Note 1)			
Static friction torque (Minimum)	Tb	N.m	0.32
Magnetizing current	Ab	A	0.25A
Brake input voltage	V	V	DC24±10%
Suction time (Maximum)	to	ms	40
Release time (Maximum)	tr	ms	20

Note1 Brakes are for maintaining object stop. Do not apply for deceleration, dynamic brakeing or emergency stop.
Brake suction and release times vary with different circuitries, please note the actual operation delay time during application.

■ Torque-Speed Curve

FRMS 50W Torque-Speed Curve

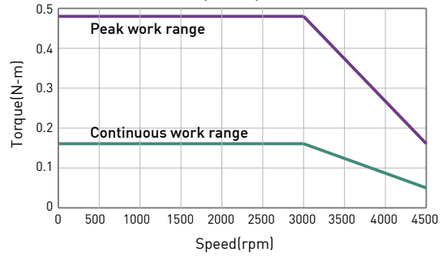

■ Dimensions

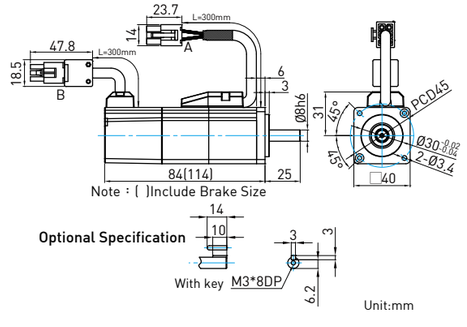

7.3.2 100W

Parameter	Symbol	Unit	FRMS102□□04□
Drive Input Voltage	V	V	AC220
Rated Power	W	W	100
Rated Torque	Tc	N.m	0.32
Rated Current	Ic	A(rms)	0.9
Peak Max. Torque	Tp	N.m	0.96
Peak Max. Current	Ip	A(rms)	2.7
Rated Speed	ωc	rpm	3000
Max. Speed	ωp	rpm	4500
Torque Constant	Kt	N.m / Arms	0.356
Back EMF Constant	Ke	Vrms / krpm	20.93
Resistance (line to line)	R	Ω	19
Inductance (line to line)	L	mH	23.78
Inertia of Rotating Parts (with brake)	J	kg-m²(×10⁻⁴)	0.051(0.055)
Weight (with brake)	M	kg	0.54(0.67)
Motor Insulation Grade	Class A (UL)		
Motor protect	Total enclosed, self-cooled, IP65 (Except for shaft and connector)		
Insulation resistance	10MΩ, DC500V		
Insulation voltage resistance	AC1500V, 60 second		
Brake specifications (Note 1)			
Static friction torque (Minimum)	Tb	N.m	0.32
Magnetizing current	Ab	A	0.25A
Brake input voltage	V	V	DC24±10%
Suction time (Maximum)	to	ms	40
Release time (Maximum)	tr	ms	20

Note1 Brakes are for maintaining object stop. Do not apply for deceleration, dynamic brakeing or emergency stop. Brake suction and release times vary with different circuitries, please note the actual operation delay time during application.

■ Torque-Speed Curve

FRMS 100W Torque-Speed Curve

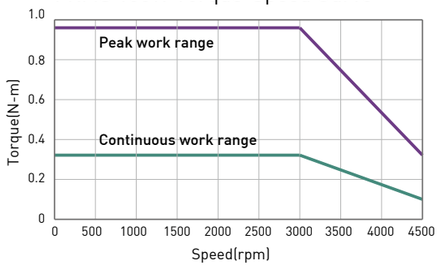

■ Dimensions

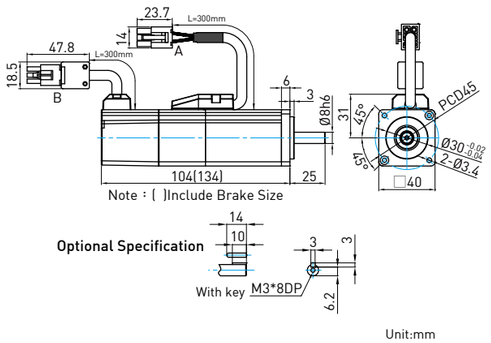

Unit:mm

7.3.3 400W

Parameter	Symbol	Unit	FRMS4B2□□06□
Drive Input Voltage	V	V	AC220
Rated Power	W	W	400
Rated Torque	Tc	N.m	1.27
Rated Current	Ic	A(rms)	2.6
Peak Max. Torque	Tp	N.m	3.81
Peak Max. Current	Ip	A(rms)	7.8
Rated Speed	ωc	rpm	3000
Max. Speed	ωp	rpm	4500
Torque Constant	Kt	N.m / Arms	0.48
Back EMF Constant	Ke	Vrms / krpm	29.61
Resistance (line to line)	R	Ω	4.13
Inductance (line to line)	L	mH	9.9
Inertia of Rotating Parts (with brake)	J	kg-m²(×10⁻⁴)	0.44(0.48)
Weight (with brake)	M	kg	1.31(1.86)
Motor Insulation Grade	Class A (UL)		
Motor protect	Total enclosed, self-cooled, IP65 (Except for shaft and connector)		
Insulation resistance	10MΩ, DC500V		
Insulation voltage resistance	AC1500V, 60 second		
Brake specifications (Note 1)			
Static friction torque (Minimum)	Tb	N.m	1.3
Magnetizing current	Ab	A	0.32
Brake input voltage	V	V	DC24±10%
Suction time (Maximum)	to	ms	30
Release time (Maximum)	tr	ms	20

Note1 Brakes are for maintaining object stop. Do not apply for deceleration, dynamic brakeing or emergency stop. Brake suction and release times vary with different circuitries, please note the actual operation delay time during application.

■ Torque-Speed Curve

FRMS 400W Torque-Speed Curve

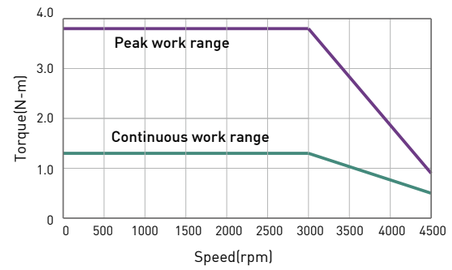

■ Dimensions

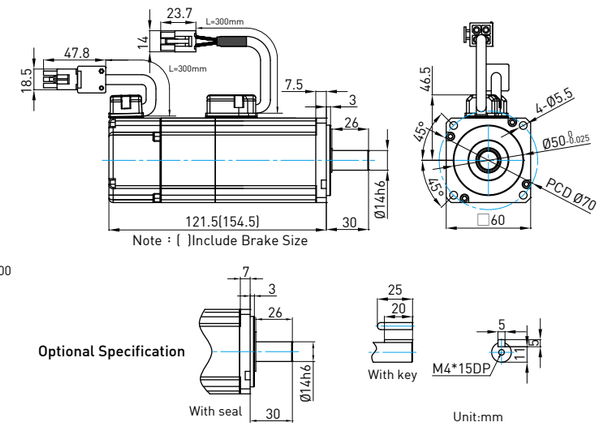

7.3.4 750W

Parameter	Symbol	Unit	FRMS752□□08□
Drive Input Voltage	V	V	AC220
Rated Power	W	W	750
Rated Torque	Tc	N.m	2.4
Rated Current	Ic	A(rms)	5.1
Peak Max. Torque	Tp	N.m	7.2
Peak Max. Current	Ip	A(rms)	15.3
Rated Speed	ωc	rpm	3000
Max. Speed	ωp	rpm	4500
Torque Constant	Kt	N.m / Arms	0.47
Back EMF Constant	Ke	Vrms / krpm	28.4
Resistance (line to line)	R	Ω	0.813
Inductance (line to line)	L	mH	3.4
Inertia of Rotating Parts (with brake)	J	kg-m²(×10⁻⁴)	1.4(1.46)
Weight (with brake)	M	kg	2.66(3.32)
Motor Insulation Grade	Class A (UL)		
Motor protect	Total enclosed, self-cooled, IP65 (Except for shaft and connector)		
Insulation resistance	10MΩ, DC500V		
Insulation voltage resistance	AC1500V, 60 second		
Brake specifications (Note 1)			
Static friction torque (Minimum)	Tb	N.m	2.4
Magnetizing current	Ab	A	0.358A
Brake input voltage	V	V	DC24±10%
Suction time (Maximum)	to	ms	45
Release time (Maximum)	tr	ms	10

Note1 Brakes are for maintaining object stop. Do not apply for deceleration, dynamic brakeing or emergency stop. Brake suction and release times vary with different circuitries, please note the actual operation delay time during application.

■ Torque-Speed Curve

FRMS 750W Torque-Speed Curve

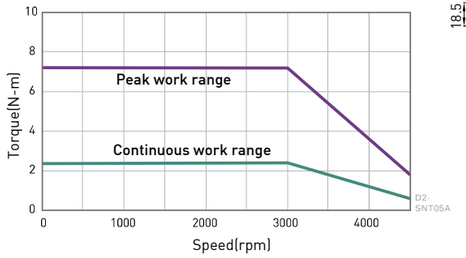

■ Dimensions

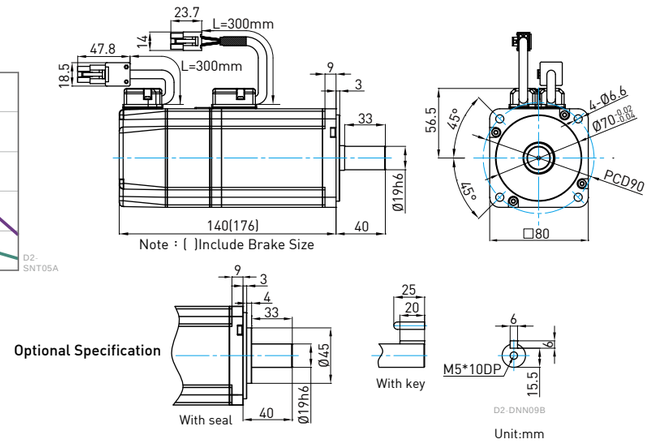

7.4 Middle inertia, Middle capacity

7.4.1 1000W

Parameter	Symbol	Unit	FRMM1K2□□13□
Drive Input Voltage	V	V	AC220
Rated Power	W	W	1000
Rated Torque	Tc	N.m	4.77
Rated Current	Ic	A(rms)	5.1
Peak Max. Torque	Tp	N.m	14.3
Peak Max. Current	Ip	A(rms)	15.3
Rated Speed	ωc	rpm	2000
Max. Speed	ωp	rpm	3000
Torque Constant	Kt	N.m / Arms	0.94
Back EMF Constant	Ke	Vrms / krpm	54.7
Resistance (line to line)	R	Ω	0.81
Inductance (line to line)	L	mH	8
Inertia of Rotating Parts (with brake)	J	kg-m²(×10⁻⁴)	7.6(8.7)
Weight (with brake)	M	kg	5.4(6.2)
Motor Insulation Grade	Class A (UL)		
Motor protect	Total enclosed, self-cooled, IP65 (Except for shaft and connector)		
Insulation resistance	10MΩ, DC500V		
Insulation voltage resistance	AC1500V, 60 second		
Brake specifications (Note 1)			
Static friction torque (Minimum)	Tb	N.m	10
Magnetizing current	Ab	A	0.56A
Brake input voltage	V	V	DC24
Suction time (Maximum)	to	ms	80
Release time (Maximum)	tr	ms	30

Note1 Brakes are for maintaining object stop. Do not apply for deceleration, dynamic brakeing or emergency stop. Brake suction and release times vary with different circuitries, please note the actual operation delay time during application.

■ Torque-Speed Curve

FRMM 1000W Torque-Speed Curve

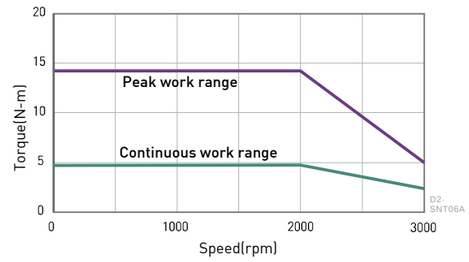

■ Dimensions

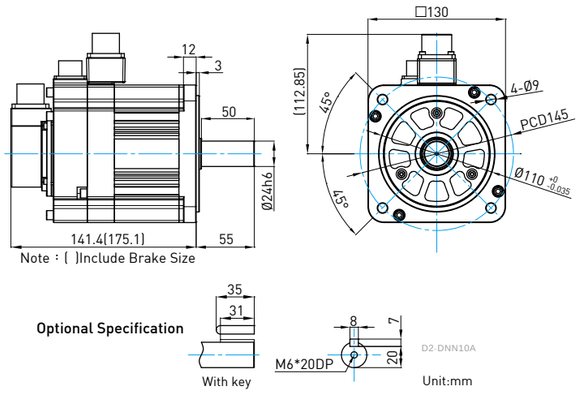

7.4.2 2000W

Parameter	Symbol	Unit	FRMM2K2□□13□
Drive Input Voltage	V	V	AC220
Rated Power	W	W	2000
Rated Torque	Tc	N.m	9.55
Rated Current	Ic	A(rms)	11
Peak Max. Torque	Tp	N.m	28.65
Peak Max. Current	Ip	A(rms)	33
Rated Speed	ωc	rpm	2000
Max. Speed	ωp	rpm	3000
Torque Constant	Kt	N.m / Arms	0.87
Back EMF Constant	Ke	Vrms / krpm	57.8
Resistance (line to line)	R	Ω	0.41
Inductance (line to line)	L	mH	3.7
Inertia of Rotating Parts (with brake)	J	kg-m²(×10⁻⁴)	13(14.1)
Weight (with brake)	M	kg	8(8.8)
Motor Insulation Grade	Class A (under certification)		
Motor protect	Total enclosed, self-cooled, IP65 (Except for shaft and connector)		
Insulation resistance	10MΩ, DC500V		
Insulation voltage resistance	AC1500V, 60 second		
Brake specifications (Note 1)			
Static friction torque (Minimum)	Tb	N.m	10
Magnetizing current	Ab	A	0.56A
Brake input voltage	V	V	DC24
Suction time	to	ms	80
Release time	tr	ms	30

Note1 Brakes are for maintaining object stop. Do not apply for deceleration, dynamic brakeing or emergency stop. Brake suction and release times vary with different circuitries, please note the actual operation delay time during application.

■ Torque-Speed Curve

FRMM 2000W Torque-Speed Curve

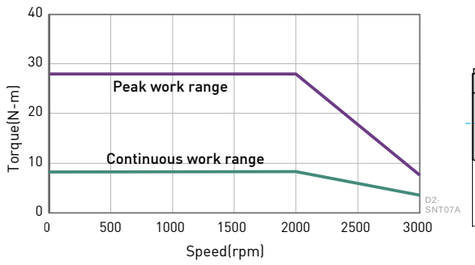

■ Dimensions

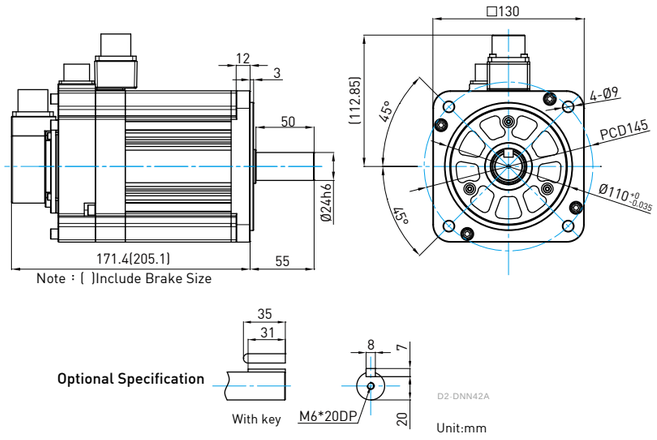

8. Cable and connector

8.1 Cable

■ Small Capacity

Name	Type	Connect	Description : 50W~750W
AC Servo Motor Power Cable	HVPS04AA□□□B	CN1	
AC Servo Motor Power and Brake Extension Cable	HVPS06AA□□□B	CN1 CN2	
AC Servo Motor Encoder Cable (13bit incremental)	HVE13IAB□□□B	CN7	
AC Servo Motor Encoder Cable (17bit incremental)	HVE17IAB□□□B		
AC Servo Motor Encoder Cable (17bit absolute)	HVE17AAB□□□B		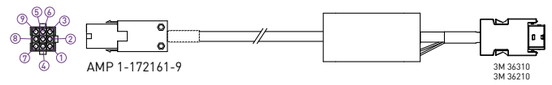

Middle Capacity — 1000W

Name	Type	Connect	Description : 1000W
AC Servo Motor Power Cable	HVPM04BA□□□B Straight Connector	CN1	
	HVPM04CA□□□B L-Type Connector		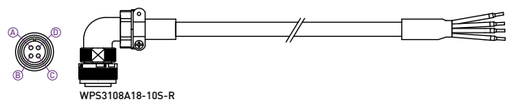
AC Servo Motor Power Cable and Brake Cable (Note1)	HVPM06BA□□□B Straight Connector	CN1	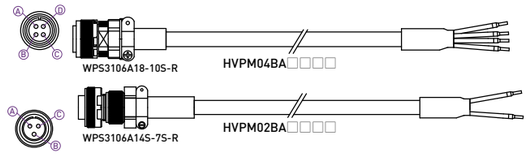
	HVPM06CA□□□B L-Type Connector		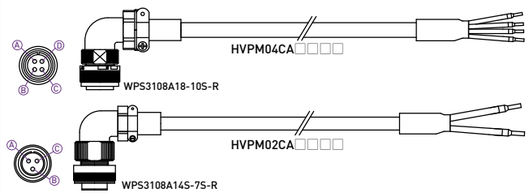
AC Servo Motor Encoder Cable (13bit Incremental)	HVE13IBB□□□B Straight Connector	CN7	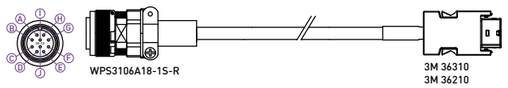
	HVE13ICB□□□B L-Type Connector		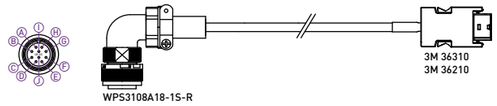
AC Servo Motor Encoder Cable (17bit incremental)	HVE17IBB□□□B Straight Connector		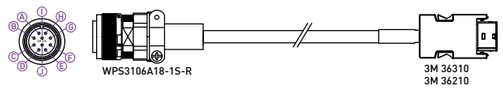
	HVE17ICB□□□B L-Type Connector		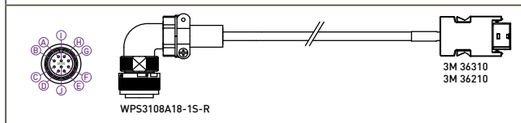
AC Servo Motor Encoder Cable (17bit absolute)	HVE17ABB□□□B Straight Connector		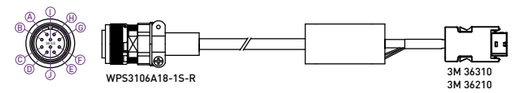
	HVE17ACB□□□B L-Type Connector		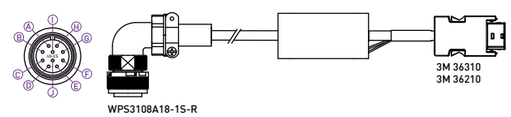

Note1 For middle capacity motors with brake, please remember to use power cable and brake cable simultaneously.

Middle Capacity — 2000W

Name	Type	Connect	Description : 2000W
AC Servo Motor Power Cable	HVPM04BB□□□B Straight Connector	CN1	
	HVPM04CB□□□B L-Type Connector		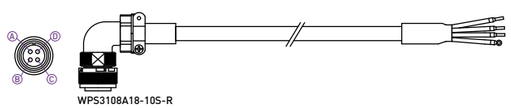
AC Servo Motor Power Cable and Brake Cable (Note1)	HVPM06BB□□□B Straight Connector	CN1	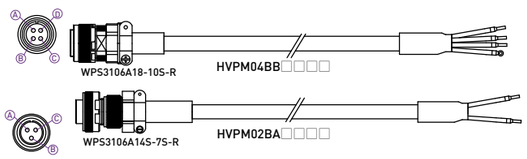
	HVPM06CB□□□B L-Type Connector		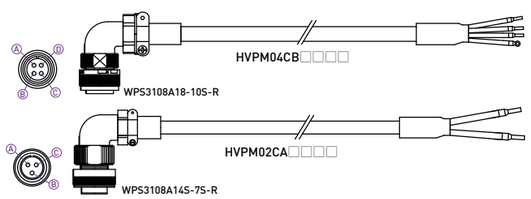
AC Servo Motor Encoder Cable (17bit incremental)	HVE17IBB□□□B Straight Connector	CN7	
	HVE17ICB□□□B L-Type Connector		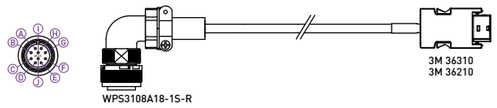
AC Servo Motor Encoder Cable (17bit absolute)	HVE17ABB□□□B Straight Connector		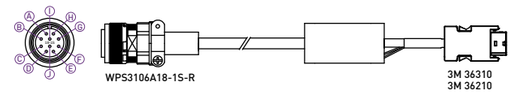
	HVE17ACB□□□B L-Type Connector		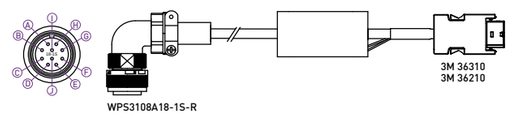
	HE00817DR300(3m)		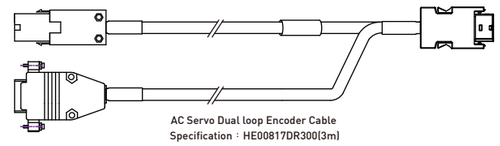

Note1 For middle capacity motors with brake, please remember to use power cable and brake cable simultaneously.

■ Communication and Interface Cable

Name	Type	Connect	
Mini USB Cable	051700800366	CN3	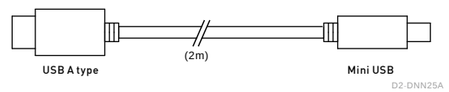
	HE00834S0800(0.3m)	CN4 / CN5	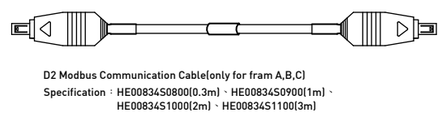
	HE00834S0900(1m)		
	HE00834S1000(2m)		
	HE00834S1100(3m)		
Interface Cable	HE00815AC200	CN6	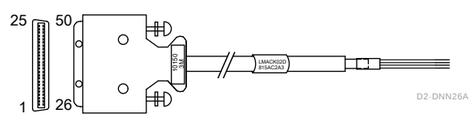
IO Extension Cable	HE00834S1200(3m)	CN6	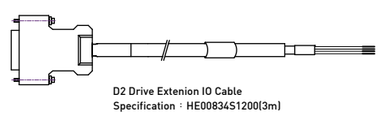

8.2 Connector

Small Capacity Series 50W~750W	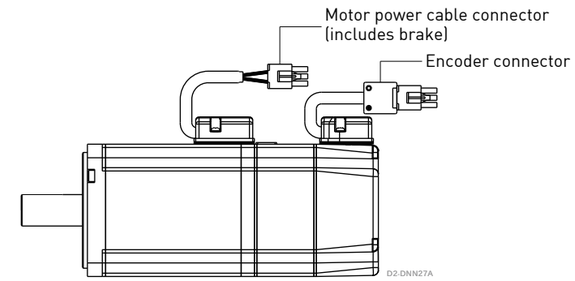
Middle Capacity Series 1000W/2000W	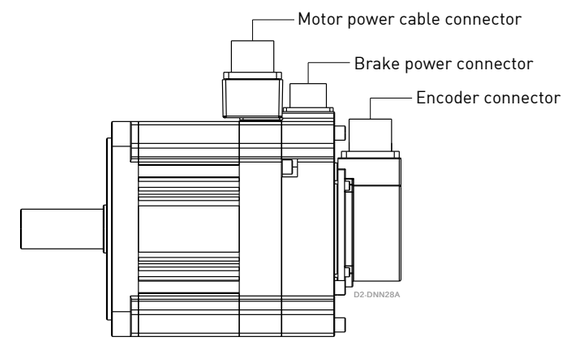

■ Motor Power Connector

Small Capacity Series / 50W~750W

Signal	AMP-172167-1 (without brake)	AMP-172168-1 (with brake)
U	3	3
V	2	2
W	1	1
GND	4	4
B+	--	5
B-	--	6

Connect Pins Position Definition

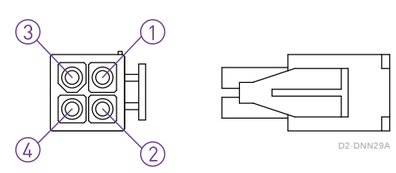

(without brake)

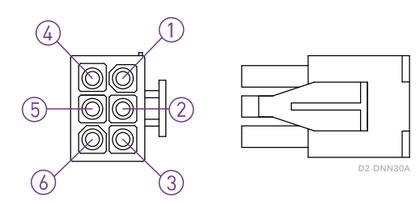

(with brake)

Middle Capacity Series /1000W · 2000W

Signal	WPS3102A18-10P-R	WPS3102A14S-7P-R
U	A	--
V	B	--
W	C	--
GND	D	--
B+	--	A
B-	--	C

Connect Pins Position Definition

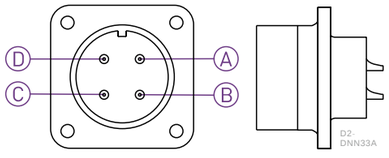

WPS3102A18-10P-R

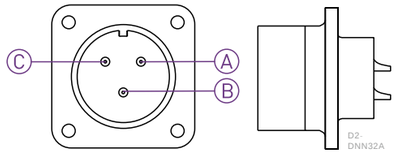

WPS3102A14S-7P-R

By brake Type, two connectors must be used simultaneously

Encoder Connector

13bit Incremental / 50W~750W

Function	Signal		AMP-172169-1
Power	5V±5%		1
	0V		2
Incremental Signal/ Hall signal	A+	U+	3
	A-	U-	4
	B+	V+	5
	B-	V-	6
	Z+	W+	7
	Z-	W-	8
Shielding	Shielding		9

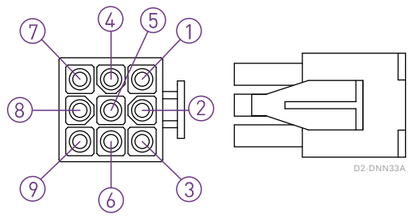

13bit Incremental / 1000W

Function	Signal		WPS3102A18-1P-R
Power	5V±5%		A
	0V		B
Incremental Signal/ Hall signal	A+	U+	C
	A-	U-	D
	B+	V+	E
	B-	V-	F
	Z+	W+	G
	Z-	W-	H
Shielding	Shielding		I

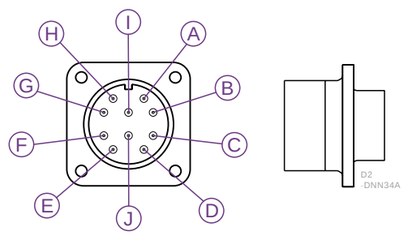

17bit incremental / 50W~750W

Function	Signal	AMP1-172169-9
Power	5V±5%	1
	0V	2
Serial Data Signal	SL+	3
	SL-	4
	MA+	7
	MA-	8
Shielding	Shielding	9

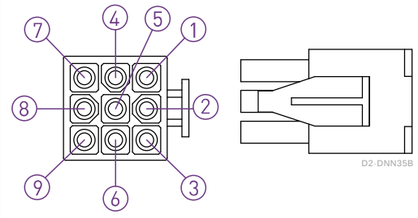

17bit incremental / 1000W · 2000W

Function	Signal	WPS3102A18-1P-R
Power	5V±5%	A
	0V	B
Serial Data Signal	SL+	C
	SL-	D
	MA+	G
	MA-	H
Shielding	Shielding	I

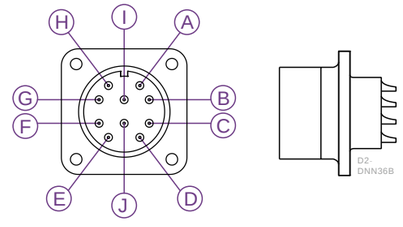

17bit absolute / 50W~750W

Function	Signal	AMP-1-172169-9
Power	5V	1
	0V	2
Battery	VB	5
	GND	6
Serial Data Signal	SD+	7
	SD-	8
Shielding	Shielding	9

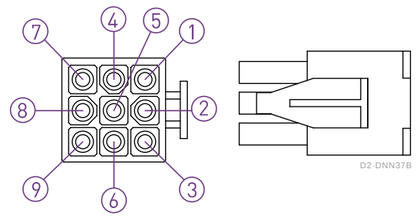

17bit absolute / 1000W · 2000W

Function	Signal	WPS3102A18-1P-R
Power	5V	A
	0V	B
Battery	VB	E
	GND	F
Serial Data Signal	SD+	G
	SD-	H
Shielding	Shielding	I

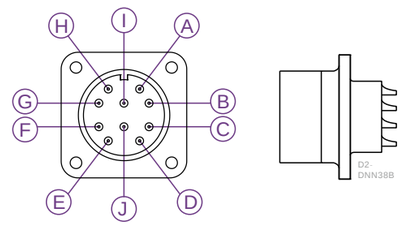

9. HIWIN single axis robot and motor adaptor flange

AC Servo Motor		HIWIN single axis robot							Drive
		KK40	KK50	KK60	KK80	KK86	KK100	KK130	
50W	FRLS052XXA4X	F2	F2	F2	F3	F3	F1	-	D2x-01xx-x-Ax
100W	FRLS102XXA4X	F2	F2	F2	F3	F3	-	-	D2x-01xx-x-Ax
200W	FRLS202XX06X	-	-	-	F0	F0	F0	F1	D2x-04xx-x-Bx
400W	FRLS402XX06X	-	-	-	F0	F0	F0	F1	D2x-04xx-x-Bx
750W	FRMS752XX08X	-	-	-	-	-	F1	F2	D2x-10xx-x-Cx

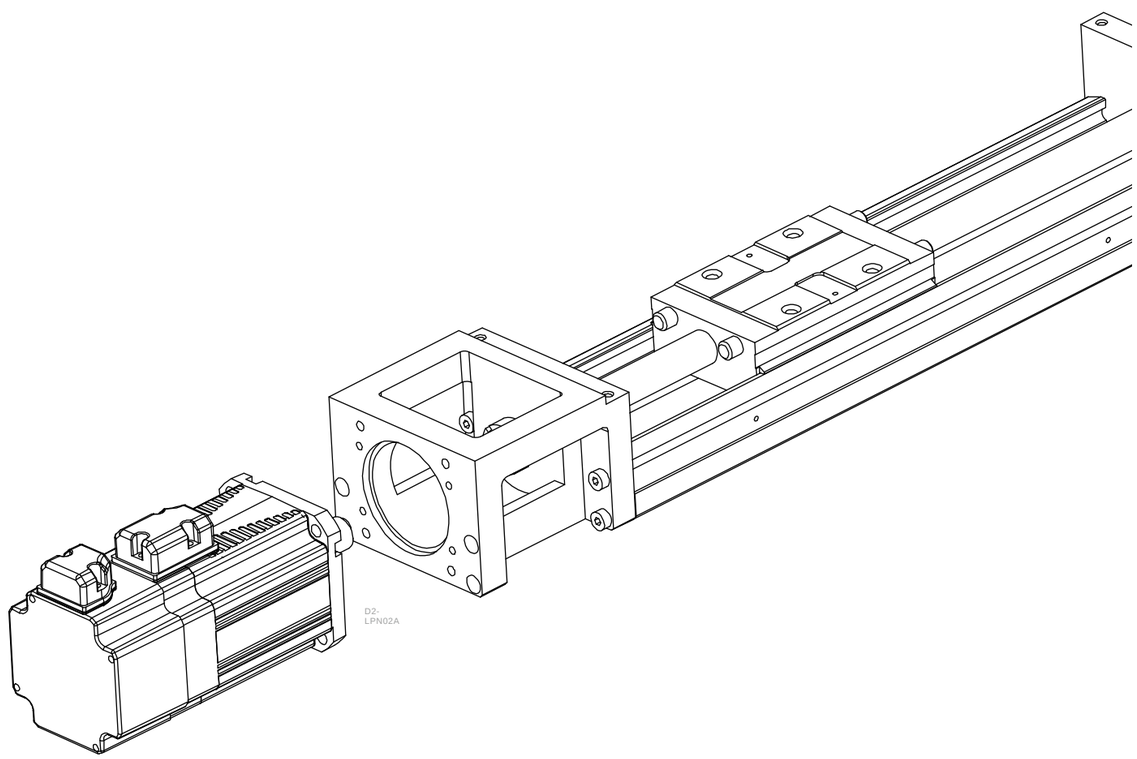

10. Servo Motor Selection Guide

The motor selection guide in this chapter is located on-line at
http://www.hiwinmikro.tw/hiwincal.aspx

1. Definition of mechanism to be driven by the motor.

Define detailed dimentions of individual mechanical components (ex: ball screw length, lead and pulley diameter)
Typical servo mechanisms are listed as follows:
[Ball screw mechanism]
[Belt mechanism]
[Rack and pinion mechanism]
[Reduction gear mechanism]

2. Definition of operating pattern (motion velocity profile).

The operating pattern can be defined by the following parameters: acceleration/deceleration time, constant-velocity time, stop time, cycle time, travel distance.

3. Calculation of load inertia and motor inertia ratio.

Calculate load inertia for each mechanical component. (Refer to "General inertia calculation method" described later.)
Then, divide the calculated load inertia by the inertia of the selected motor then check the inertia ratio. Note that the ratio should less than 10, if the selected motor is less than 750W. If the power of selected motor is higher than 1000W, the ratio should less than 10.

4. Calculation of motor velocity.

Calculate the motor velocity from the moving distance, acceleration/deceleration time and constant-velocity time.

5. Calculation of torque.

Calculate the required motor torque from the load inertia, acceleration/deceleration time and constant-velocity time.

6. Calculation of motor

Select a motor that meets the above 3 to 5 requirements.

10.1 Introduction of motor selection relevant parameters

■ Peak torque

Peak torque indicates the maximum torque that the motor requires during operation (mainly in acceleration and deceleration steps). The reference value is 80% or less of the maximum motor torque. If the torque is a negative value, a regenerative discharge resistor may be required.

■ Traveling torque, stop holding torque

Traveling torque indicates the torque that the motor requires for a long time. Stop holding torque indicates that the amount of torque required for a motor to remain in a fixed position.
Traveling torque calculation formula for each mechanism.

List of symbol：
W：Workpiece weight [kg]
B_P：Lead [m]
D：Pulley diameter [m]
F：External force [N]
B_{eff}：Mechanical efficiency
μ：Coefficient of friction
g: Acceleration of gravity 9.8[m/s^2]

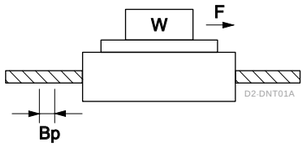

Traveling torque

$$T_f = \frac{B_P}{2\pi B_{eff}}(\mu g W + F)$$

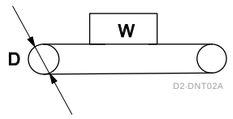

Traveling torque

$$T_f = \frac{D}{2\pi B_{eff}}(\mu g W + F)$$

■ Effective torque

Effective torque indicates a root-mean- square value of the total required for running and stopping the motor per unit time. The reference value is approximate 80% or less of the rated motor torque.

$$T_{rms} = \sqrt{\frac{T_a^2 \times t_a + T_f^2 \times t_b + T_d^2 \times t_d}{t_c}}$$

T_a: Acceleration torque [N-m]
T_f: Traveling torque [N-m]
T_d: Deceleration torque [N-m]
t_c: Cycle time [s] (Run time + Stop time)

t_a: Acceleration time [s]
t_b: constant-velocity time [s]
t_d: Deceleration time [s]

■ Motor velocity

Maximum velocity of motor in operation: The reference value is the rated velocity or lower value. When the motor operates at the maximum velocity, you must pay attention to the motor torque and temperature rise.

■ Load inertia and motor inertia ratio

Inertia is like the force to retain the current moving condition. Inertia ration is calculated by dividing load inertia by rotor inertia. Generally, for motor with 750W or lower capacity, the inertia ratio should be “10” or less. For motor with 1000W or higher capacity, the inertia ratio should be “10” or less. If the system need quicker response, a lower inertia ratio is required.

10.2 General inertia calculation for various rigid objects of uniform composition

Shape	J calculation formula	Shape	J calculation formula
Disk 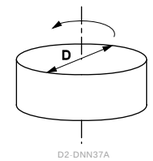	$J=\frac{1}{8}MD^2$	Separated rod 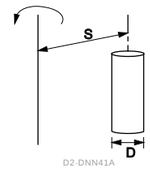	$J=\frac{1}{8}MD^2+MS^2$
Solid cylinder 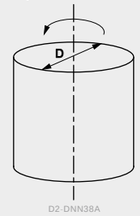	$J=\frac{1}{8}MD^2$	Straight rod 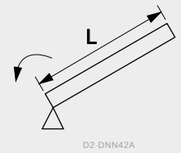	$J=\frac{1}{3}ML^2$
Hollow cylinder 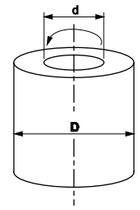	$J=\frac{1}{8}M(D^2+d^2)$	Prism 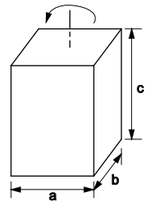	$J=\frac{1}{12}M(a^2+b^2)$
Uniform rod 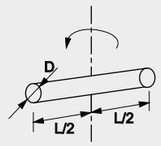	$J=\frac{1}{48}M(3D^2+4L^2)$		

List of symbol：
J : Inertia [kg-m^2]
M : Mass [kg]
D : Outer diameter [m]
d : Inner diameter [m]
L : Length [m]
a, b, c : Side length [m]
S : Distance [m]

If mass (M [kg]) is unknown, calculate it with the following formula：
Mass M[kg] = Density ρ [kg/m^3] x Volume V[m^3]
Density of each material
Iron ρ = 7.9 x 10^3 [kg/m^3]
Brass ρ = 8.5 x 10^3 [kg/m^3]
Aluminum ρ = 2.8 x 10^3 [kg/m^3]

10.3 Equivalent inertia calculation for mechanism

Mechanism	J calculation formula
Ball screw 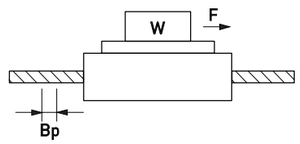	$J = J_B + \frac{MB_P^2}{4\pi^2}$
Belt(Conveyor) 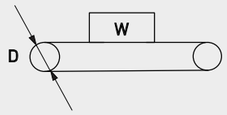	$J = \frac{1}{4} W_b D^2$ *Excluding drum J
Rack and pinion 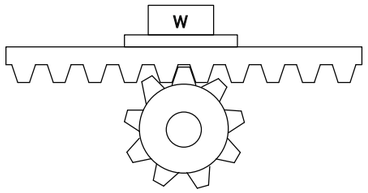	$J = J_p + (M_r + W_r)\frac{D^2}{4}$
Reduction gear 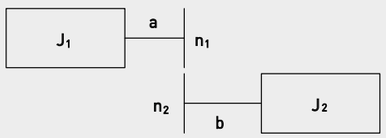	$J = J_1 + (\frac{n_2}{n_1})^2 J_2$ Inertia on shaft "a"

List of symbol:
J : Inertia [kg-m^2]
J_B : J of ball screw
J_P : J of pinion
M : Mass [kg]
M_r : Mass of rack [kg]
W_b : Workpiece weight on belt [kg]
W_r : Workpiece weight on rack [kg]
P : Lead
D : Drum diameter [m]
n_1 : A rotational speed of a shaft [r/min]
n_2 : A rotational speed of b shaft [r/min]

10.4 Operating pattern (motion velocity profile)

■ Trapezoidal profile

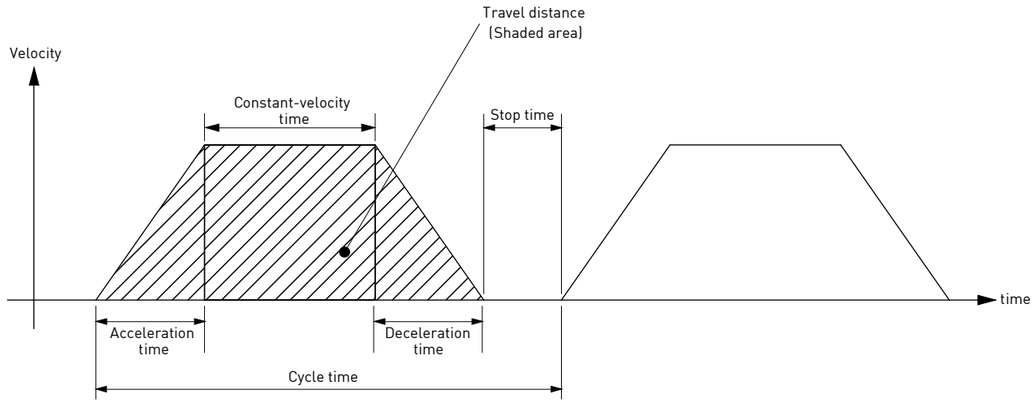

■ Triangle profile

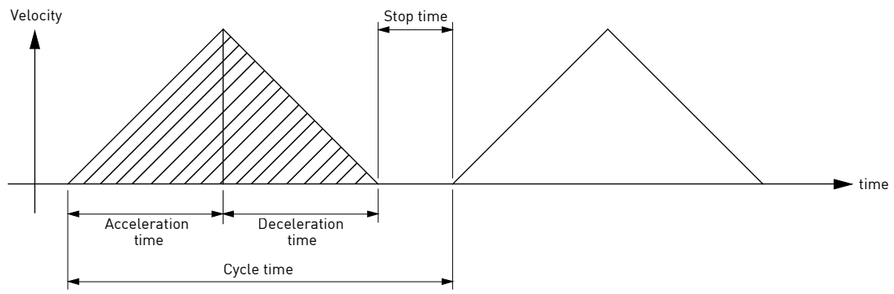

10.5 Motor selection example - ballscrews mechanism

Workpiece weight W = 5 [kg]
Ball screw length B_L = 0.5 [m]
Ball screw diameter B_D = 0.02 [m]
Ball screw lead B_P = 0.02 [m]
Ball screw efficiency B_{eff} = 0.9
Travel distance 0.3 [m]
Coupling inertia $J_C = 10 \times 10^{-6}$ [kg-m^2]

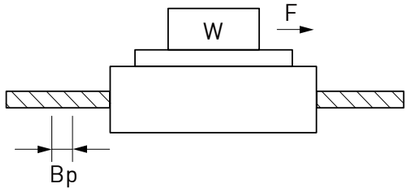

■ Running pattern(velocity profile)

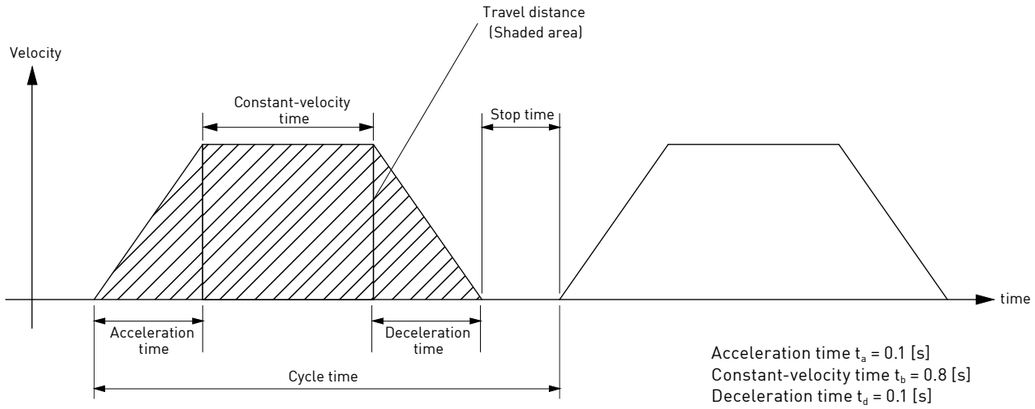

Acceleration time t_a = 0.1 [s]
Constant-velocity time t_b = 0.8 [s]
Deceleration time t_d = 0.1 [s]
Cycle time t_c = 2 [s]
Travel distance 0.3[m]
Stop time t_s = 1.0 [s]

■ Ball screw weight

$$B_W = \rho \times \pi \times \left(\frac{B_D}{2}\right)^2 \times B_L$$

$$= 7.9 \times 10^3 \times \pi \times \left(\frac{0.02}{2}\right)^2 \times 0.5$$

$$= 1.24\,[\text{kg}]$$

■ Load inertia

$$J_L = J_C + J_B + J_W = J_C + \frac{1}{8} B_W \times B_D^2 + \frac{W \times B_P^2}{4\pi^2}$$

$$= 0.00001 + \frac{1.24 \times 0.02^2}{8} + \frac{5 \times 0.02^2}{4\pi^2}$$

$$= 1.226 \times 10^{-4}\ [\text{kg-m}^2]$$

■ Provisional motor selection

Choose Hiwin 200W Servo motor : $J_M = 0.17 \times 10^{-4}$ [kg-m^2]

■ Calculation of inertia ratio

$$\frac{J_L}{J_M} = \frac{1.226 \times 10^{-4}}{0.17 \times 10^{-4}} = 7.21$$

The inertia ratio is less than 10.

■ Calculation of maximum velocity (Vmax)

$$\frac{1}{2} \times t_a \times V_{max} + t_b \times V_{max} + \frac{1}{2} \times t_d \times V_{max} = \text{Travel distance}$$

$$\frac{1}{2} \times 0.1 \times V_{max} + 0.8 \times V_{max} + \frac{1}{2} \times 0.1 \times V_{max} = 0.3$$

$$V_{max} = 0.334\ [\text{m/s}]$$

■ Calculation of motor velocity (N [r/min])

Ball screw lead B_P = 0.02 [m]

$$N = \frac{V_{max}}{B_P} = \frac{0.334}{0.02} = 16.7\,[\text{rps}] = 1002\,[\text{rpm}]$$

1002[rpm] is less than 3000[rpm] (rated velocity of Hiwin 200W Servo motor)

Calculation of torque

Traveling torque	$T_f = \frac{B_P}{2\pi B_{eff}}(\mu gW + F) = \frac{0.02}{2\pi 0.9}(0.1\times 9.8\times 5 + 0) = 0.017\ [N\text{-}m]$
Acceleration torque	$T_a = \frac{(J_L + J_M)\times\frac{2\pi N}{60}}{t_a} + T_f$ $= \frac{(1.226\times 10^{-4} + 0.7\ \times 10^{-4})\times\frac{2\pi\times 1002}{60}}{0.1} + 0.017$ $= 0.163\ [N\text{-}m]$
Deceleration torque	$T_d = \frac{(J_L + J_M)\times\frac{2\pi N}{60}}{t_d} - T_f$ $= \frac{(1.226\times 10^{-4} + 0.7\ \times 10^{-4})\times\frac{2\pi\times 1002}{60}}{0.1} - 0.017$ $= 0.129\ [N\text{-}m]$

Verification of maximum torque

Ta = 0.163 [N-m] < 1.91 [N-m] (Maximum torque of Hiwin 200W Servo motor)

Verification of effective torque

$$T_{rms} = \sqrt{\frac{T_a^2\times t_a + T_f^2\times t_b + T_d^2\times t_d}{t_c}}$$

$$= \sqrt{\frac{0.163^2\times 0.1 + 0.017^2\times 0.8 + 0.129^2\times 0.1}{2}}$$

$$= 0.048\ [N\text{-}m]$$

0.048[N-m] < 0.64[N-m](Rated torque of Hiwin 200W Servo motor)

Evaluation

Judging from the inertia ratio calculated above, selection of 200W motor is preferable, although the torque margin is significantly large.

11. Motor / Drive Requirements List

Customer :		Date :
Email :		Contact Person : Title :
Drive series	☐ D2T ☐ D2	Note :
AC Motor Series*	Low inertia : ☐ 50W ☐ 100W ☐ 200W ☐ 400W Middle inertia : ☐ 50W ☐ 100W ☐ 400W ☐ 750W ☐ 1000W ☐ 2000W Format : ☐ 13bit Incremental ☐ 17bit incremental ☐ 17bit absolute	
Key*	☐ No ☐ Yes	
Brake*	☐ No ☐ Yes	
Seal*	☐ No ☐ Yes	
AC input voltage(V)	☐ Single phase 220V ☐ Three phase 220V	
Servo motor connecting wires*	Motor power (flexure resistance) Cable Length : ☐ 3M ☐ 5M ☐ 7M ☐ 10M Encoder (flexure resistance) Cable Length : ☐ 3M ☐ 5M ☐ 7M ☐ 10M	
Related accessory requirements*	☐ Pulse Wire ☐ USB cable ☐ Single-phase filter ☐ Three-phase filter	
Control mode*	☐ Position control ☐ Velocity control ☐ Torque control ☐ EtherCAT(CoE) ☐ Others	
Match method	☐ Slide/model no: ☐ Reducer/reduction ratio: ☐ Timing belt ☐ Gear rack ☐ Ball screw/guiding distance: screw outer diameter:	
Host	☐ PLC/manufacture: model: ☐ Axis card/manufacture: model:	
Special Need		
Installation	☐ Horizontal ☐ Vertical	
Speed requirement		
Accelaration requirement		
Weight requirement		

The information below is to be filled out by HIWIN or authorized agents.

Recommended specifications :

Fields with * must be filled

Salesperson :

12. Safety Precautions

Thank you for purchasing HIWIN's AC servo motor. Installation and operation of the motor must be in accordance with the HIWIN manual. Before using the servo motor, please read these safety instructions and precautions carefully.

Unpacking instructions

1. Before using the servo motor, please read these safety instructions and precautions carefully. HIWIN is not responsible for any damage, accident, or injury caused by incorrect handling.
2. Examine the appearance of the motor for any unusual marks or damage from shipment.
3. Inspect the wires for damage.
4. Do not disassemble the motor. Since the product design has been based on structure calculations, computer simulations, and prototype testing, do not disassemble the product without the permission of HIWIN engineers.
5. Supervise children when handling this product.
6. People with psychosomatic illness or insufficient experience should not handle this product, unless under the direct supervision of managers or product narrators.

* If any items are damaged or incorrect, please contact your distributor or HIWIN sales representative.

Safety instructions

1. The product can only be repaired by HIWIN engineers. Please send the product back to us if there is any unusual phenomenon.
2. Do not hold the motor by its wire harness or shaft.
3. Do not hit the motor or shaft. Shock can damage the encoder inside the motor.
4. Do not apply loads to the motor shaft that are in excess of the specified value.
5. Protect the motor and encoder from high electrical noise, vibration, and unusual temperatures.
6. Do not change the motor parts or disassemble the screws. HIWIN will not be responsible for any damages, injuries, or accidents that may occur.

Wiring instructions

1. Ensure the specified power input value before using the product, and verify that the proper power supply is being used.
2. Before operation, please ensure that the motor, brake, and encoder are connected correctly. Incorrect wiring may cause abnormal motor operation or even cause permanent damage to the motor.
3. To avoid voltage coupling and electrical noise on the encoder, ensure adequate separation of the motor power wires and the encoder wires.
4. Ensure that the motor ground wire is connected to the ground terminal on the servo drive.
5. Do not perform a dielectric voltage-withstand test on any encoder terminal. The test may cause damage to the encoder.

Operation instructions

1. Higher than maximum specified current may cause demagnetization of magnetic components inside the motor.
2. The AC servo motor is designed to operate through a dedicated servo drive. Do not connect to a commercial power source (100/200V AC, 50/60 HZ). The motor will not operate correctly and may cause permanent damage.
3. The motor must be operated within its specified range.
4. Attention should be given to ensure adequate cooling and ventilation of the motor during operation.
5. For long term use, the motor shaft should be resupplied with proper and sufficient oil during the period of operation.
6. If any abnormal odor, noise, smoke, temperature rises or vibration is detected, stop the motor immediately. Remove power from the servo drive and isolated the motor.

Motor International Standard

		Drive	Motor
CE Directives CE	EMC Directives	EMC: EN61800-3 EN55011 EN61000-6-2 EN61000-6-4 EN61000-2-4 IEC60146-1-1 IEC61000-2-1	EN55011 EN61000-6-2 EN61000-6-4
	Low-Voltage Directives	LVDS:EN61800-5-1	EN60034-1 EN60034-5
UL Directives		UL:E348161 (D2T 100W/400W/1000W)	UL1004-1 UL1004-6

Maintenance and Storage instructions

1. Do not store the product in an inflammable environment or with chemical agents.
2. Store the product in a place without humidity, dust, harmful gases, or liquids.
3. The motor shaft opening is neither waterproof nor oil-proof. Do not install the motor in an environment where there is harmful gas, liquid, excessive moisture, or water vapor.
4. Do not store the servo motor where it will be subjected to vibration or shock in excess of the specified limit.
5. The storage and transportation temperature of this product: -20˚C~+65˚C
6. Clean：Wipe with Alcohol (70%)
7. Before shipping, the motor shaft is coated with antirust oil to protect the motor shaft against rust formation. However, the material of the motor shaft is not entirely rust-proof. When the motor storage time has exceeded six months, please inspect and examine the motor shaft and resupply with proper and sufficient antirust oil at least once every three months thereafter.
8. Product disposal：Follow the local laws and regulations for recycling.

A one year guarantee is provided from the date of delivery. For product damage caused by improper operation (Please refer to the notes and instructions in this operation manual). HIWIN will not be held responsible for replacing or maintaining the product as a result of any natural disasters that may occur during this period.

Warning：For the proper use of the HIWIN AC servo motor read these safety precautions carefully before installation, operation, and maintenance.

Warning：Do not touch when motor operating to avoid being scalded.

- Please read "warning signs".
- Turn power off before clean product.
- Read manual before use.
- If the product is used under overload condition shell temperature rises.
- Without manufacturer's permission, please do not arbitrarily modify the device.
- It is difficult to ensure electromagnetic compatibility (EMC) problems do not occur in some environments.
- Removal of damaged power cable fasteners, with care and with attention for power cable fasteners.
- Avoid impact on of shaft end and encoder.
- Products cannot be used in environment with flammable materials.